trusscore® Wall&CeilingBoard™

Quick Start Guide

For use with Trusscore Snap-In Trims

Materials



Trusscore Wall&CeilingBoard Panels

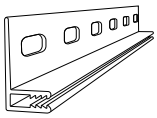

Universal Base

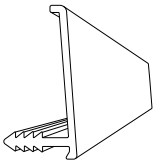

Snap-In J Trim

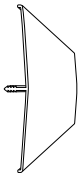

Snap-In H Trim
Optional



Screws
1-1/4" Pan/Truss head

If your J Trim or H Trim look different from what is shown above, click here for alternate installation instructions.

Tools required



Drill/Screw Gun



Tin Snips



Radial Arm Saw or Handheld Power Saw



Level



Tape Measure



Utility Knife



Ladder and/or Scaffolding



Safety Glasses



Face Mask

What to know before starting

- Acclimatize panels to room temperature for at least 24 hours before installation
- Panels are best cut with a blade designed to cut vinyl products or a fine-tooth blade installed in the reverse direction [Watch How]. Use tin snips to cut trim and avoid fully closing the blades while cutting for best results
- Don't overtighten screws to allow for expansion and contraction of panels and maintain a 1/4 in. clearance between the ends of each panel and any adjacent trims. Panels should be able to move slightly once fastened
- The final panel of a wall or ceiling area will need to be trimmed (ripped) to fit [Watch How]
- When installing on the walls and ceiling of a project, it is recommended to start with the ceiling first

Step 1: Ceiling

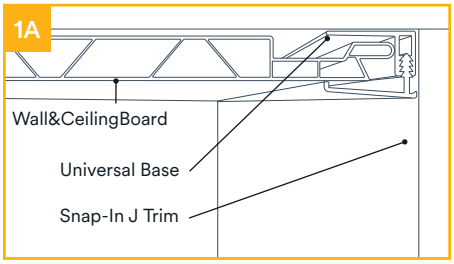

Begin by aligning the Universal Base for the Snap-In J Trim tight to the corner so the screw flange is pointing away from the wall and fasten to the ceiling. Choose one end of the ceiling and align the teeth of the Snap-in J Trim with the Universal Base and press together using a Wall&CeilingBoard panel to determine the proper trim channel width.

Position the Wall&CeilingBoard panel so the screw flange is pointing away from the wall and fasten to the ceiling a minimum of once every 24 inches.

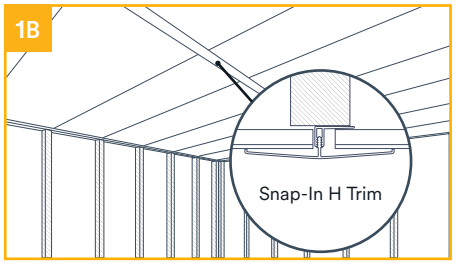

Continue installing the remaining Wall&CeilingBoard panels. If your ceiling dimensions exceed the longest available panel length of 20 ft., use Snap-In H Trim to join panel sections.

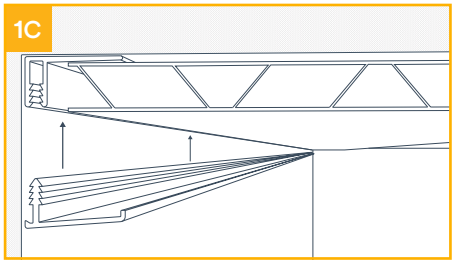

Install the last panel by inserting it into the groove of the previous panel and push tight to the ceiling. Immediately install the Snap-In J Trim into the Universal Base to hold the panel in place. Ensure the trim fully snaps together so there is very little movement of the panel up and down.

Finish the ceiling by installing the remaining Snap-In J Trim onto the remaining Universal Base.

Step 2: Walls

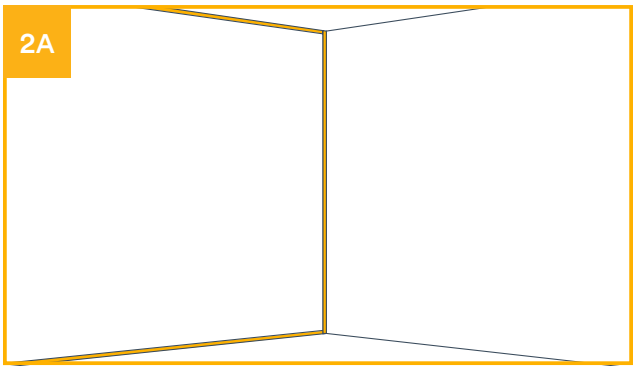

Begin by installing the Universal Base for Snap-In J Trim along the top, bottom, and sides for one wall. Align the Universal Base tight to the corner so that the screw flange is pointing away from the adjacent wall, floor, and ceiling, and fasten to the wall. Install the Universal Base around the perimeter of openings like doors and windows. Align the teeth of the Snap-In J Trim with the Universal Base at the bottom of the wall only and press together. Insert a piece of Wall&CeilingBoard to determine the proper channel width.

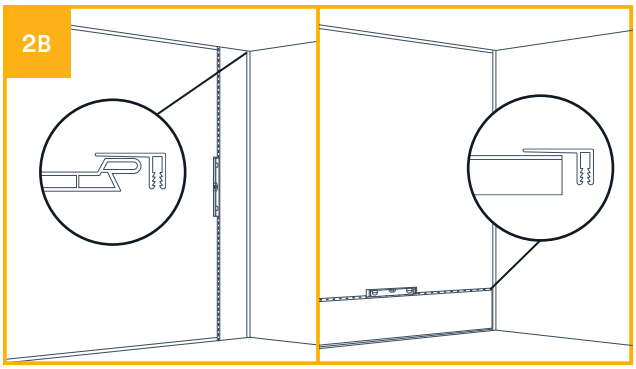

Measure and cut the length of the first wall panel. For vertical installs, start in one corner and position the panel so the screw flange is pointing away from the wall. For horizontal installs, start at the bottom of the wall and position the panel so the screw flange is pointing up from the floor. Using a level, ensure the panel is level before fastening. For both panel orientations, insert the panel into the fully assembled Snap-In J Trim at the bottom of the wall.

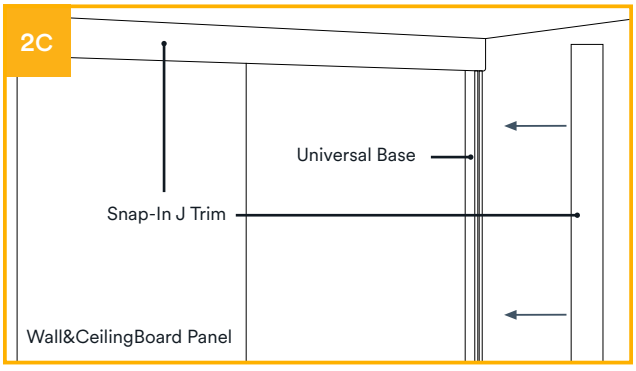

Install the remaining wall panels for the first wall and finish by installing the Snap-In J Trim onto each Universal Base.

Repeat the above steps to install the trims and panels for each remaining wall.

Step 3: Integrating Trusscore SlatWall
(recommended)

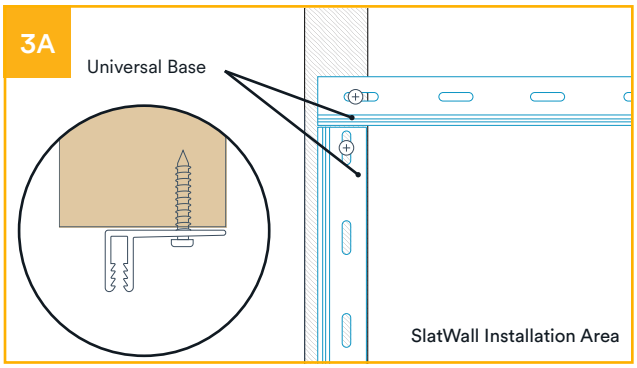

Installing Trusscore SlatWall too? Great—let's back up a step. Before installing Wall&CeilingBoard on your walls, plan out and mark your intended SlatWall installation area. SlatWall panels should start and finish on stud locations. Determine where SlatWall panel ends will be and install a Universal Base at each of those stud locations. Ensure the screw flange is flush with the edge of the stud, so the teeth channel is centered within the stud.

Install a Universal Base along the top of the entire length of the SlatWall installation area.

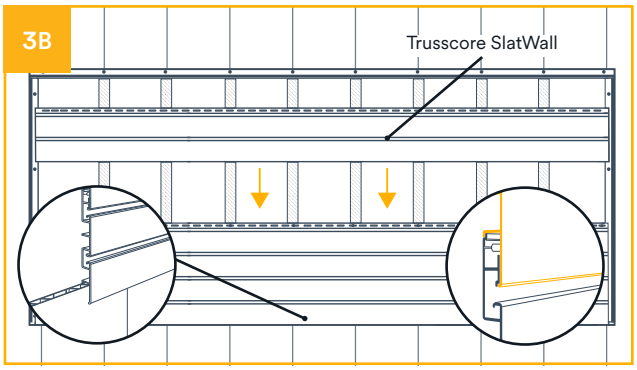

Once the installation area is marked, and Wall&CeilingBoard panels are installed, cut SlatWall panels to size and install one at a time, starting from the bottom. Rest the bottom lip on the back of the SlatWall panel directly on top of the Wall&CeilingBoard panel below it and fasten through the screw flange into each stud location*. Place the next panel on top of the previously installed panel, aligning the ends and apply downward pressure to interlock the panels. You will feel and hear a "snap".

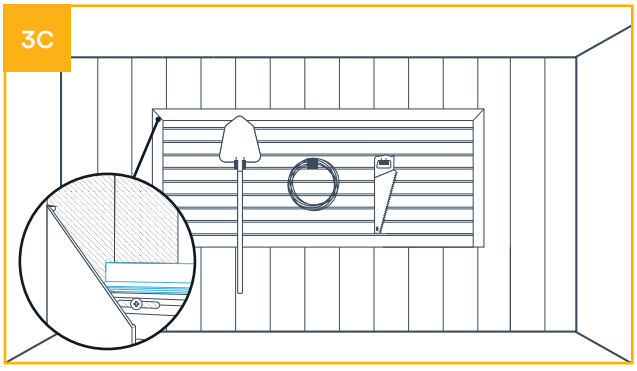

Once all panels are installed, cut the Snap-In H Trim to size, and snap it into the Universal Base to cover seams at the sides and top for a smooth transition from SlatWall to Wall&CeilingBoard. Add your choice of standard 3 in. SlatWall accessories and enjoy your newly organized, upgraded space!

* Trusscore SlatWall panels must be fastened to studs every 16 in on-center minimum. Installation of blocking may be required for greater stud intervals.

We're here to help. Reach out for additional support.
hello@trusscore.com | 1.888.418.4679

Copyright © 2025 Trusscore Inc. Trusscore Wall&CeilingBoard and Trusscore Slatwall are trademarks of Trusscore Inc. All other trademarks are the property of their respective owners.
Specifications are subject to change. T-QS101S-001 03/2026

Looking for more?
trusscore.com/install