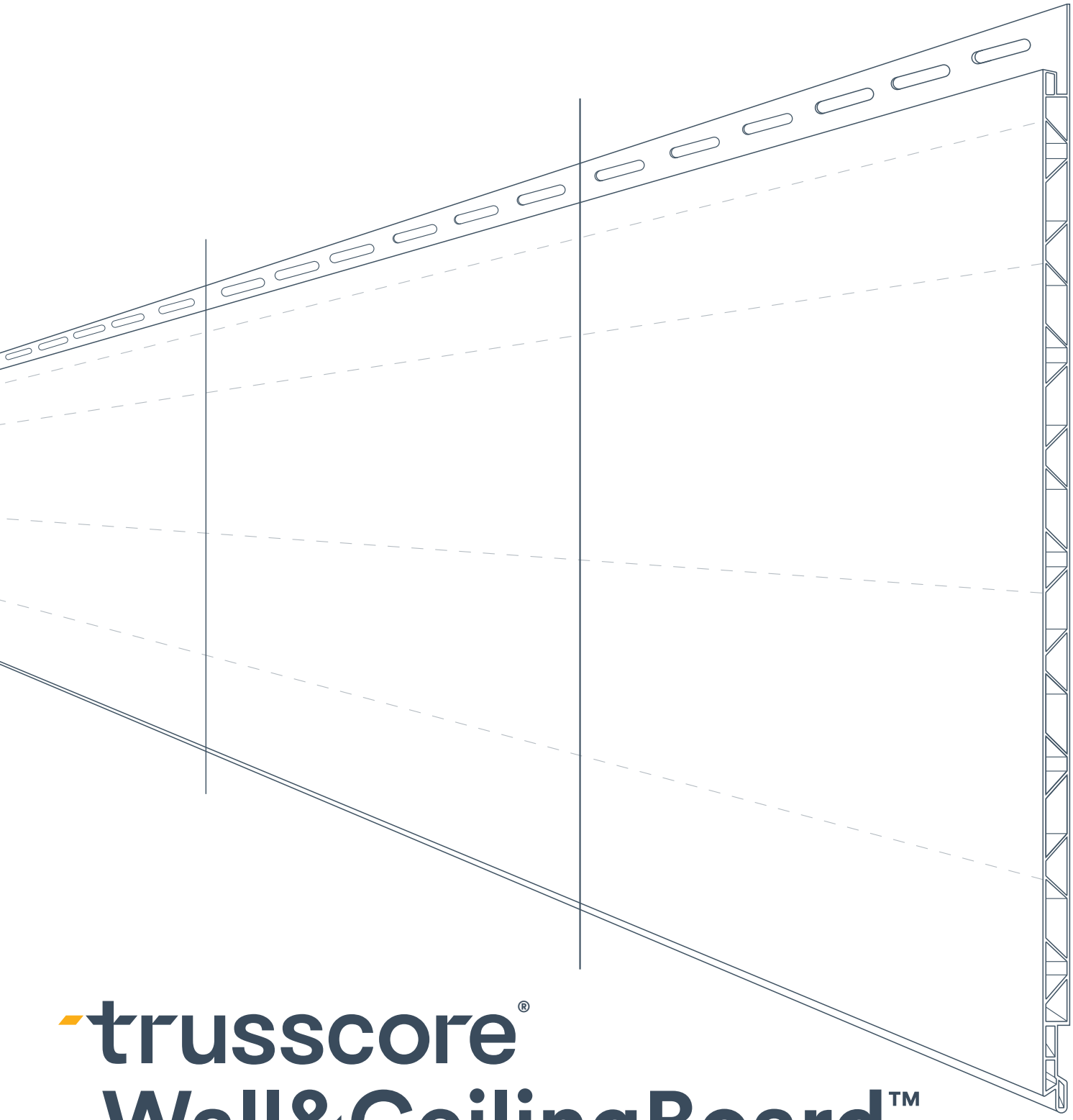

trusscore®

Wall&CeilingBoard™

Installation Guide

For use with Trusscore Snap-In Trims

Trusscore® Wall&CeilingBoard™

Trusscore Wall&CeilingBoard is designed with a high-strength polymer formulation and engineered to be the perfect alternative to traditional drywall systems or fiberglass reinforced panels (FRP). The Trusscore tongue and groove interlocking system makes installation quick and easy, and the unique truss design provides industry leading strength and durability.

Where you need a smooth finish that is easy to clean, low-maintenance, and abuse-resistant, Trusscore Wall&CeilingBoard has your project covered.

Contents

Tools Required ... 3

General Recommendations ... 3

- Temperature Range & Acclimatization ... 3
- Cutting Panels ... 3
- Cutouts ... 4
- Cutting Trims ... 4
- Long Panel Runs ... 5
- Ripping Panels ... 5
- Fastening ... 5
- Fastening Tips ... 6
- Drywall Anchors ... 6
- Panel Spacing ... 6
- High-Moisture Environments ... 7
- Use of Silicone Sealant ... 7
- Radiant Heat ... 7
- Epoxy Floors ... 7
- CFIA, USDA & FDA Approved Installations ... 7

Planning & Preparation ... 7

- Installation Order ... 8
- Ceiling Instructions ... 8
- Wall Instructions ... 9

Integrating Trusscore SlatWall with Trusscore Wall&CeilingBoard ... 10

- Placement and Layout of Installation Area ... 10
- Bottom Connection ... 12
- Installing the Remaining Trusscore SlatWall Panels ... 13
- Side Connection ... 14
- Top Connection ... 15

Trim Applications ... 17

- Installation Tips ... 17
- Inside Corners ... 18
- Outside Corners ... 19
- Bottom of Wall ... 20
- Panel Joints ... 21
- Window & Door Openings ... 21

How to Replace a Damaged Panel After Installation ... 23

How to Fasten Items (Pictures, Shelves) to Trusscore Wall&CeilingBoard ... 25

Installing Spring Toggle Bolts ... 25

Heavy Items ... 26

Cleaning ... 27

- Day-to-Day Cleaning ... 27
- Pressure Washing ... 27

Disclaimers ... 27

Specifications ... 28

Trim Dimensions ... 29

trusscore

What You Need

Tools Required

- Drill/Screw Gun
- Level
- Safety Glasses
- Tin Snips
- Utility Knife
- Face Mask
- Radial Arm Saw or Handheld Power Saw
- Ladder and/or Scaffolding
- Tape Measure

For more information on product warranty please visit trusscore.com/warranty

Trusscore Materials

- Trusscore Wall&CeilingBoard
- Trusscore SlatWall

Trusscore Snap-In Trims

- Universal Base
- Snap-In J Trim
- Snap-In Inside Corner Cove Trim
- Snap-In H Trim

Additional Trusscore Trims

- Outside Corner Square
- Outside Corner Rounded
- Base Trim

General Recommendations

⚠ **If your J Trim, Inside Corner Cove Trim, or H Trim look different from what is shown above,** click here for alternate installation instructions.

Temperature Range & Acclimatization

Trusscore Wall&CeilingBoard is designed to be installed between 10-20°C (50-68°F). For installations outside that temperature range, please consult our Cold Weather Installation Guide.

⚠ **Regardless of temperature, Trusscore Wall&CeilingBoard must sit in the location where it's being installed for a minimum of 24 hours before installation to minimize expansion or contraction after the product is installed.** We recommend loosening or removing any packaging material that may restrain the product while it's acclimatizing. [Watch How]

Cutting Panels

As a simple method of eliminating cracking or chipping Trusscore Wall&CeilingBoard, use a saw blade designed to cut vinyl products. Alternatively, installing standard saw blades in the reverse direction is recommended (Fig. 1). [Watch How]

Coarse-toothed blades should be avoided for best results. As an additional option, concrete/masonry blades can be used. For all blades, apply smooth even pressure to the product when completing the cut. [Watch How]

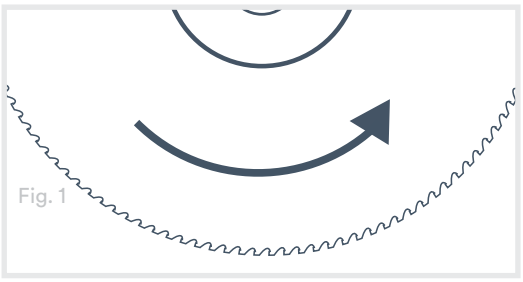

CAUTION: Use of a blade installed in the reverse direction on any materials other than Trusscore could be unsafe.

Here are some examples of widely available blades we recommend.

Description	Product Number
IRWIN Marathon 7-1/4" - 120T Vinyl Siding Corded Circular Saw Blade	11830
Dewalt 12" - 80T Precision Trim Saw Blade	DW3232PT
AvantiPro 12" - 80T Fine Finish Saw Blade	P128080PP
Makita 7-1/2" - 40T Carbide Tipped Saw Blade	A-90629
Makita 6-1/2" - 44T Carbide Tipped Fine Crosscutting Saw Blade	A-98360
Diablo 7-1/4" - 60T Carbide Tipped Ultra Finish Saw Blade	D0760

In cold weather, move the saw through the material slowly to prevent chipping or cracking. Performing a test cut will allow you to confirm the performance of your cutting tool without impacting your project.

For your safety, safety goggles and a face mask should be worn while using a power saw.

Any offcuts you create are recyclable.

Cutouts

If holes are required for objects like electrical boxes, lights, taps, etc., it is recommended to use a jigsaw, oscillating saw or hole saw to cut out the shape—Square cut-out: [Watch How] Round cut-out: [Watch How].

Here are some widely available options we recommend.

Description	Product Number
Bosch Basic for Metal-Thin Jig Saw Blade with 17-24 TPI	T118A
Diablo Bi-Metal General Purpose Jig Saw Blade with 5/10 TPI	DJT345XF
Dewalt HCS Clean Cut (Wood) Jig Saw Blade with 10 TPI	DW3760H
Milkwaukee 3" Diameter Hole Dozer Hole Saw Blade with Arbor	49-56-9670
Milkwaukee Universal Fit Oscillating Saw Blade	48-90-1231

Square cut-outs should be made following the steps below.

1. Measure the location of the opening on the wall
2. Mark the perimeter of your opening on the panel
3. When using a jigsaw drill a 1/2" hole in the corner of the required opening (Fig. 2)

Insert the blade into the hole and proceed to cut out along your marked lines.

If performing this cut after the panel has been installed, ensure the space behind the area to be cut is free of obstructions, electrical wires, plumbing or any other object.

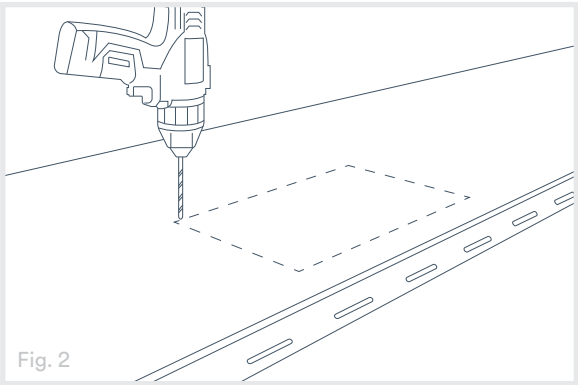

Fig. 2

Cutting Trims

Tin snips are the safest and easiest tool to use when cutting Snap-In J Trim. It is recommended to measure and mark your cut lines on the fully assembled trim and Universal Base first, then disassemble and cut each piece separately using tin snips.

A hand held circular saw or miter saw is recommended to cut Snap-In Inside Corner Cove Trim and H Trims. With a saw, it is not necessary to disassemble the trim from the Universal Base before cutting.

Long Panel Runs

When installing Trusscore Wall&CeilingBoard in applications that require a long, continuous run of panels, it is recommended to install an expansion joint to accommodate panel expansion and contraction.

Please consult our Technical Guide Installing Expansion Joints for Long Panel Runs for more details.

Ripping Panels

A rip-cut is a technique (common in woodworking) that cuts a material in a straight line, parallel to the length of the board/panel. Cutting Trusscore Wall&CeilingBoard with this technique is occasionally necessary, depending on the layout and configuration of the project. [Watch How]

To ensure even panel spacing on your project, plan the layout of your Wall&CeilingBoard panels prior to installation. If the wall space requires performing a rip cut on one or more panels, ensure that any ripped panels maintain a minimum width of 8" If necessary, cutting both the first panel and last panel of your wall or ceiling installation will accomplish this.

- If you are cutting the first panel, cut off the tongue side
- If you are cutting the last panel, cut off the groove (screw flange) side

When measuring the coverage needed, measure only the panel profile (exposed face), not the screw flange. See the Specifications section of this document for more information about the exposed face dimensions of Trusscore Wall&CeilingBoard.

Important – you need to allow for 1/4" of space at the end of the wall for expansion/contraction.

Fastening

Trusscore Wall&CeilingBoard is designed to be installed with screws. Use corrosion resistant #8/#10 gauge screws with a flat-bottomed, low profile head (i.e. truss head, pancake head, round or washer head, cabinet, and other low profile screws) and a minimum head diameter of 3/8" (Fig. 3).

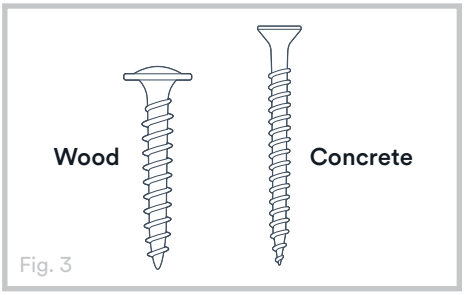

Fig. 3

Wall Assembly	Screw Recommendation	Screw Length
Wood Stud	#8/#10 Truss Head, Pancake Head, Round or Washer Head, Cabinet and Other Low Profile Screws	1-1/4"
Drywall		1-3/4" to 2"
Furring Strips/Strapping		2-1/2"
Plaster		2" to 2-1/2"
Concrete	3/16" Flathead Tapcon	1-1/4"
Metal or Steel Studs	Self-Tapping #8/#10 Low Profile (as above)	1-1/4"

⚠ For highly corrosive or moist environments, we recommend the use of stainless-steel screws

⚠ Failure to follow fastening instructions may damage the panel and/or void the warranty

Fastening Tips

- **Do not over-tighten screws**
- Allow a minimum of 1/16" (about the thickness of a dime) between the back of the screw head and the screw flange (Fig. 4)
- Always fasten in the center of the screw flange slots; fastening at the end of the slots can cause the panels to buckle or distort (Fig. 5)
- Screws must be installed straight and level to allow for movement (Fig. 6)
- All panels must be allowed to slide freely after fastening to allow for expansion and contraction
- Screw should penetrate a minimum of 1" into solid backing
- When installing vertically, a screw is required for every 2' of Trusscore panel or trim
- When installing horizontally, a screw is required on each stud location (usually every 16" or 24")

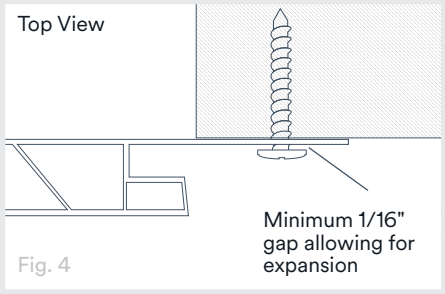

Fig. 4

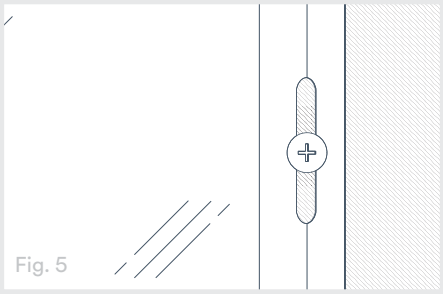
Fig. 5

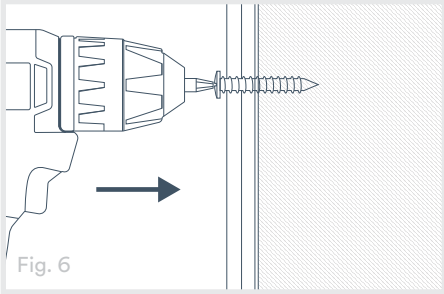
Fig. 6

Drywall Anchors

There may be instances where screw locations do not penetrate into solid backing and adding furring strips or strapping is not an option, such as when installing on top of drywall. In this case, drywall anchors may be used.

The recommended drywall anchor is #6 Wall Arrow™ by Attaches Reliable Fasteners (part number 059-999-KB).

It is recommended to use screws wherever possible on panels or trims following the fastening guidelines. Drywall anchors should only be used when there is no solid backing at a screw location (i.e., one or two drywall anchors per panel).

The drywall anchor will replace the screws being used and will act as the fastener for that location. Using a hammer, tap the drywall anchor through the screw flange ensuring to leave the minimum 1/16" gap between the drywall anchor head and the screw flange. Then using the included screws with the drywall anchors, insert a screw into the drywall anchor and fasten until flush with the drywall anchor head.

Panel Spacing

It is essential that a minimum of 1/4" clearance is left at the ends of all panels and trims to allow for expansion and contraction. For longer lengths (> 20' long), allow 3/8" clearance.

For vertical panels or trims that sit flush on the bottom Snap-In J Trim or Base Trim, a minimum of a 1/2" clearance must be left at the top of the panel (as all expansion will take place at the top of the panel).

High-Moisture Environments

If you're installing Trusscore Wall&CeilingBoard in a high moisture environment such as a car wash, for example, the following guidelines must be followed:

- Install panels in a vertical orientation to allow for the best possible drainage
- Apply a small bead of silicone, approximately the thickness of a string of yarn, along the tongue of the panel and insert the tongue into the groove of the previous panel. Press the panels firmly together to ensure a proper connection and wipe away any excess silicone
- If you are using Snap-In J Trim at the bottom of your wall, you must drill drainage holes in the bottom of the Snap-In J Trim per the guidelines in the Trim Application section of this document

Use of Silicone Sealant

We recommend that a silicone sealant is used to seal all corners, around all fixtures, and to repair small holes. The best way to select a corresponding colored silicone is to compare a sample of Trusscore to the color shown physically on the silicone tube at the store, as colors and brands will vary regionally.

Radiant Heat

All sources of radiant heat must be shielded and located with a minimum of 24" clearance between it and Trusscore Wall&CeilingBoard. Consult the manufacturer of any heater for further guidelines regarding any necessary shielding and clearances before installing.

Epoxy Floors

When installing Wall&CeilingBoard in a location that will receive an epoxy floor, the epoxy cannot be sprayed onto the Trusscore Wall&CeilingBoard. Please consult our Trusscore & Epoxy Floors Technical Guide for more details.

CFIA, USDA & FDA Approved Installations

Trusscore Wall&CeilingBoard panels are fully compliant with the requirements set out by the CFIA, USDA and FDA for areas where food is prepared. In these applications, the following guidelines must be followed.

- The product is strictly for use on non-food contact surfaces
- All joints are to be sealed with an acceptable flexible caulking compound to provide a smooth, flush, and impervious joint

In Canada, DAP Silicone Ultra Kitchen, Bath & Plumbing Sealant can be used for this application. In the USA, the product is branded as DAP Commercial Kitchen 100% Silicone Sealant. Both meet FDA Reg. 21, CFR 177.2600 and are certified to NSF/ANSI Standard #51.

Planning & Preparation

- Check surfaces for straightness and install furring strips or strapping where necessary; make sure that all vapour barriers etc are installed to code prior to Trusscore Wall&CeilingBoard being installed
- Trusscore Wall&CeilingBoard should be installed perpendicular to ceiling joists or roof trusses; when additional strapping must be installed, 1" x 4" or 2" x 4"furring strips or strapping should be the minimum that is installed; if installing parallel, joists must be 16" on-center
- If furring strips or strapping are required, it should be installed perpendicular to the framing members at 24" on-center
- Install wood blocking (short pieces of lumber for added support/coverage) around all openings to properly support trims
- If you're suspending lights or other items, install adequate backing at each location as required
- Do not begin installation until the building is fully enclosed, heating/cooling equipment is in operation and any residual moisture from construction has been removed

Installation Order

If Trusscore Wall&CeilingBoard is being installed on both the ceiling and walls of a project, it is recommended to be installed on the ceiling first.

Ceiling Instructions

1. Begin by measuring and cutting the Universal Base for the trim around the perimeter of the ceiling. Align the Universal Base tight to the corner so that the pre-punched screw flange is pointing away from the wall and fasten to the ceiling. Choose one end of the ceiling where you will start your first panel row and align the teeth of the Snap-In J Trim with the Universal Base and press together (Fig. 7). Insert a Wall&CeilingBoard panel into the trim to determine the proper channel width.

   Note: For most applications, it is not recommended to use Snap-In Inside Corner Cove Trim for the top or bottom of walls. It is best used for the vertical corners only.

2. Measure and cut the length of the first ceiling panel. Position the panel so the screw flange is pointing away from the wall and insert the panel into the fully assembled Snap-In J Trim (Fig. 8). Remember to leave 1/4" of clearance at both panel ends for expansion and contraction. Ensure the panel is aligned straight to the wall before fastening. Measure on each end from the wall to the edge of the panel and if the measurements are equal, the panel is aligned straight.

3. Fasten the panel a minimum of once every 24" with the appropriate recommended screws. Remember not to over tighten your screws.

4. If your ceiling is longer than your panel lengths, the panels must be joined where the panel ends meet using the Snap-In H Trim (Fig. 9). Refer to the Panel Joints portion of the Trim Applications section of this document for details.

5. With the first panel row installed, the rest of the ceiling panels can be installed. The tongue of the second panel will be inserted into the groove of the first panel. Press panels firmly together during installation to ensure a proper connection. Once the two panels are firmly interconnected, the most recently added panel can be fastened.

6. Periodically check your installation to ensure the panels continue to be installed in straight, even rows. To do this, measure the distance from the wall to the edge of your panels at both ends (Fig. 10). If both measurements are identical, the installation is adequately aligned. If the measurements are uneven, you will need to correct the positioning of your board(s).

7. The final panel will need to be cut to fit. Refer to the Ripping Panels section for details on how to do this. [Watch How]

8. Install the last panel by inserting it into the groove of the previous panel and push tight to the ceiling. Immediately install the Snap-In J Trim into the Universal Base to hold the panel in place (Fig.11). Ensure the trim fully snaps together so there is very little movement of the panel up and down.

9. Finish the ceiling by installing the remaining Snap-In J Trim onto the remaining Universal Base.

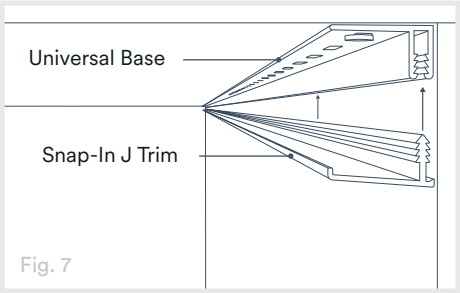

Fig. 7

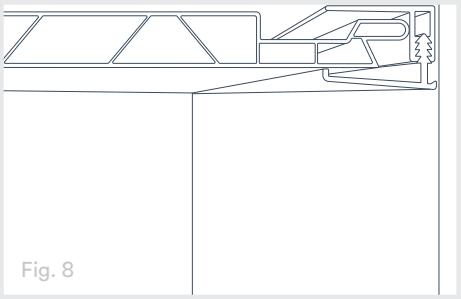
Fig. 8

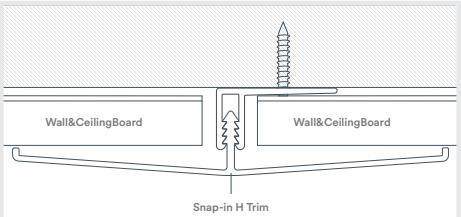

Fig. 9

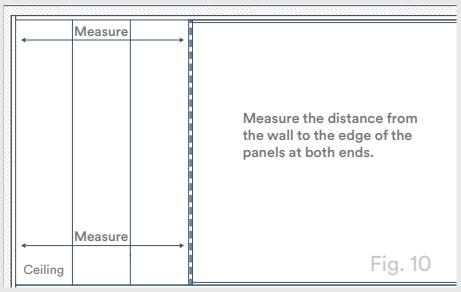

Fig. 10

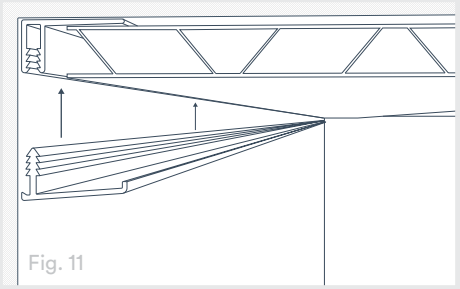
Fig. 11

Wall Instructions

1. Begin by measuring and cutting the Universal Base for the trim along the top, bottom, and sides for one wall. Align the Universal Base tight to the corner so that the screw flange is pointing away from the adjacent wall, floor, and ceiling, and fasten to the wall (Fig. 12). Base Trim can also be used along the bottom of the wall if desired. Align the teeth of the Snap-In J Trim with the Universal Base at the bottom of the wall only and press together. Insert a piece of Wall&CeilingBoard to determine the proper channel width.

   Note: For most applications, it is not recommended to use Snap-In Inside Corner Cove Trim for the top and bottom of walls. It is best used for the vertical corners only. If using Snap-In Inside Corner Cove Trim for the vertical corners, only one Universal Base is needed per corner, and it is installed after the panel.

   Guidelines for trim installation can be found in the Trim Applications section of this document.

2. If using Snap-In Trim to frame out openings, install the Universal Base around the perimeter of openings like doors and windows.
3. Measure and cut the length of the first wall panel. For vertical installs, start in one corner and position the panel so the screw flange is pointing away from the wall (Fig. 13). For horizontal installs, start at the bottom of the wall and position the panel so the screw flange is pointing up from the floor (Fig. 14). For both panel orientations, insert the panel into the fully assembled Snap-In J Trim at the bottom of the wall. Remember to leave 1/4" of clearance at both panel ends for expansion and contraction. Using a level, ensure the panel is level before fastening.
4. For vertical installs, fasten the panel a minimum of once every 24" into studs and for horizontal installs, a minimum of once for each stud location. Use the appropriate recommended screws. Remember not to over tighten your screws.
5. If your wall is taller or longer than your panel lengths, the panels must be joined where the panel ends meet using the Snap-In H Trim (Fig. 15). Refer to the Panel Joints portion of the Trim Applications section of this document for details.
6. With the first panel row installed, the remaining wall panels can be installed. The tongue of the second panel will be inserted into the groove of the first panel. Press panels firmly together during installation to ensure a proper connection. Once the two panels are firmly interconnected, the most recently added panel can be fastened.
7. Check your installation periodically to ensure the panels continue to be installed in straight, even rows. To do this, measure the distance from the wall or floor to the edge of your panels at both ends (Fig. 16). If both measurements are identical, the installation is adequately aligned. If the measurements are uneven, you will need to correct the positioning of your board(s).
8. The last panel of the wall will need to be cut to fit. Refer to the Ripping Panels section for details on how to do this. [Watch How]
9. Finish the wall by installing the Snap-In J Trim or Inside Corner Cove Trim onto each Universal Base.
10. Repeat steps 1 to 9 to install the trims and panels for each remaining wall.

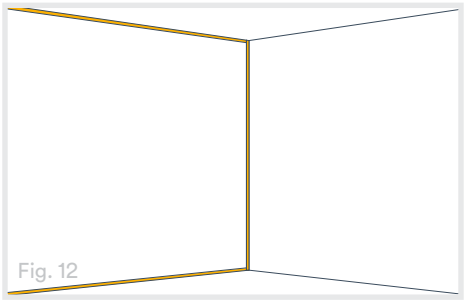
Fig. 12

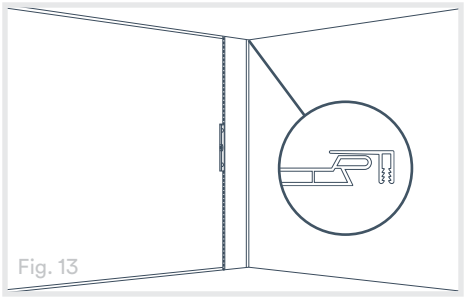
Fig. 13

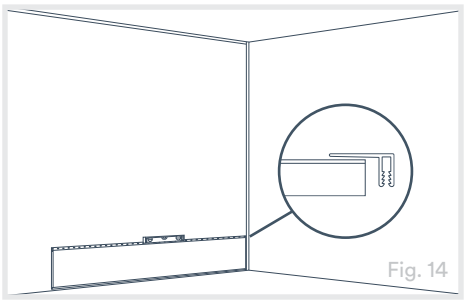
Fig. 14

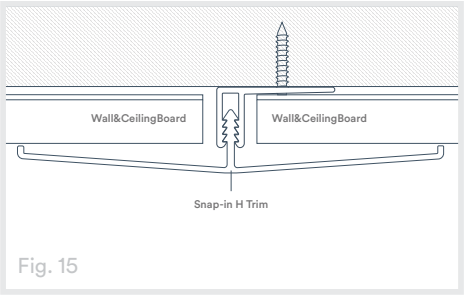

Fig. 15

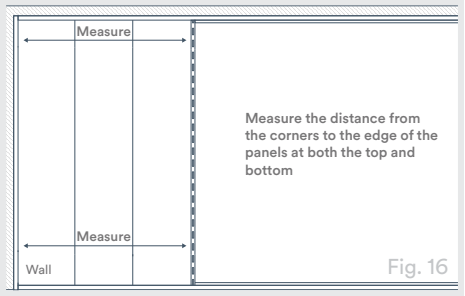

Fig. 16

Integrating Trusscore® Wall&CeilingBoard™ and Trusscore® SlatWall™

Trusscore SlatWall integrates seamlessly with Trusscore Wall&CeilingBoard. This section will walk you through the installation process of integrating the two products in your project.

For even more detailed instructions and considerations regarding the installation of Trusscore SlatWall, please visit the Trusscore SlatWall Installation Guide.

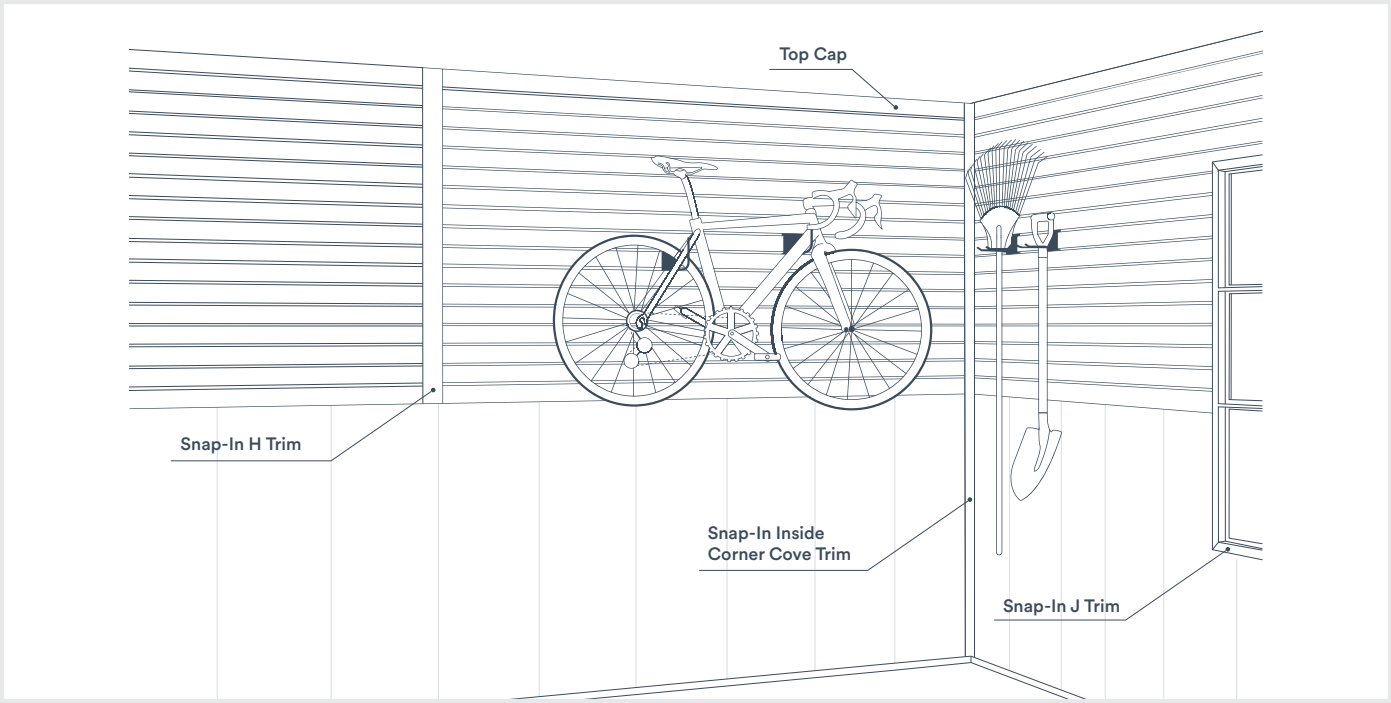

Planning and preparing your desired installation space are necessary first steps. Please refer to the Planning & Preparation section of this installation guide.

Placement and Layout of Installation Area

1. Refer to the image below for the recommended installation layout (Fig. 17) and appropriate spacing measurements (Fig. 18). SlatWall panels should start and finish on stud locations. Identify stud locations and leave adequate space between Wall&CeilingBoard, SlatWall panels, and the Universal Base for the Snap-In H Trim, which transitions between the two. Suggested spacing is the same for both horizontal and vertical Trusscore Wall&CeilingBoard installation orientations.

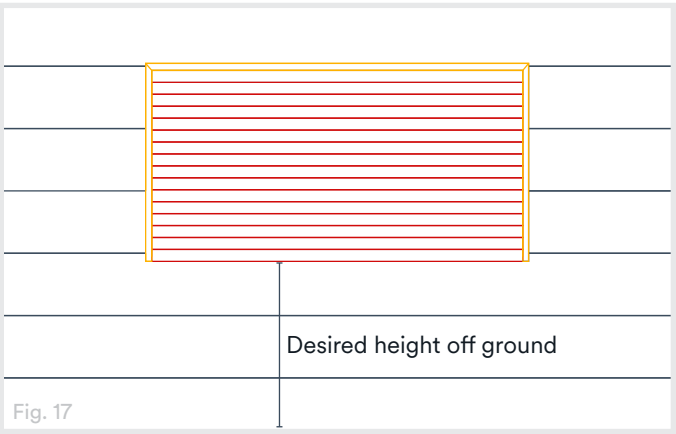

Fig. 17

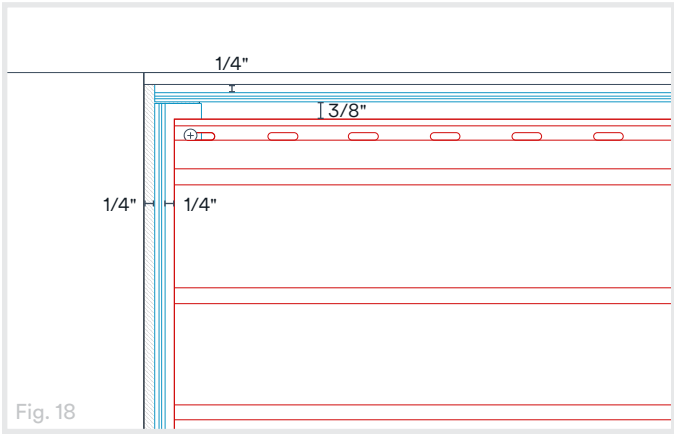

Fig. 18

Trusscore Wall&CeilingBoard Trusscore SlatWall Snap-In H Trim Universal Base

2. Inside the SlatWall installation area, locate and mark each wall stud using a stud finder (Fig. 19). Use a level and a pencil to mark each stud from the top to the bottom of your installation area, ensuring each line is plumb (Fig. 20).

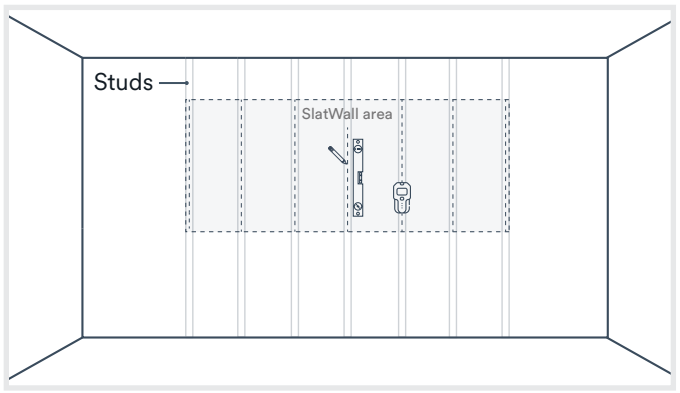

Fig. 19

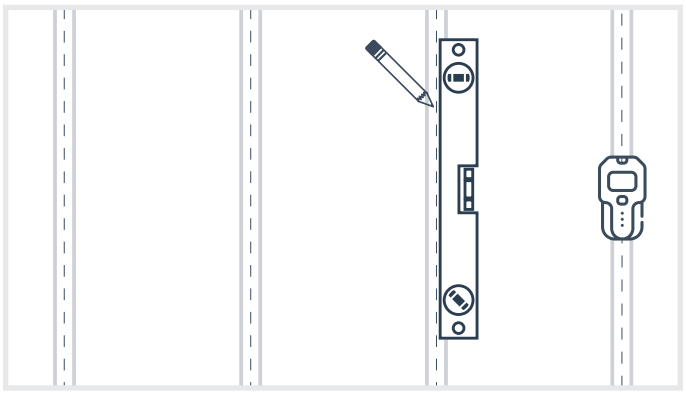

Fig. 20

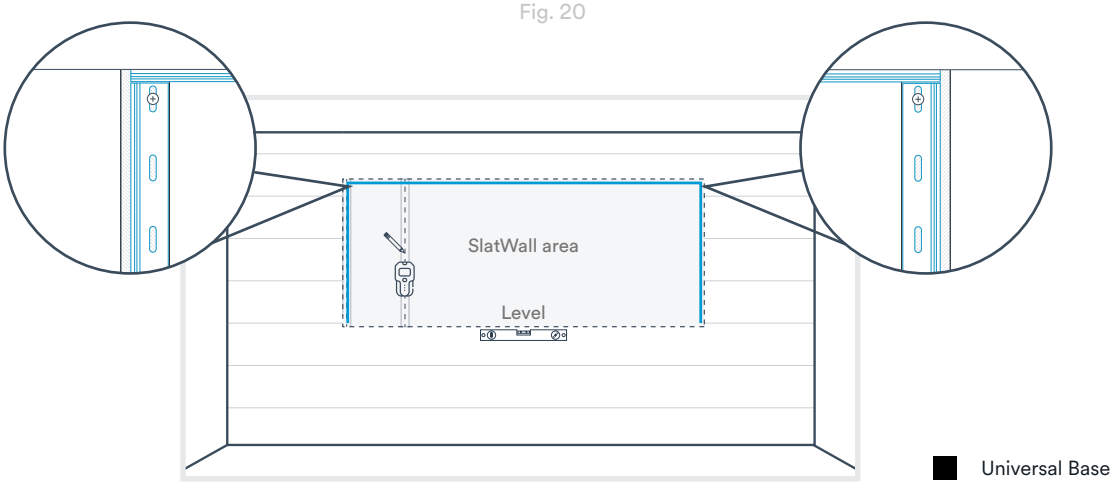

Fig. 21

⚠ Each SlatWall panel must be fastened to studs every 16" on-center minimum. If stud intervals are greater than 16", the installation of blocking between studs may be required to provide sufficient support to the SlatWall panels, trim and any adjacent Trusscore Wall&CeilingBoard panels if applicable.

3. Within the SlatWall installation area, determine where the SlatWall panel ends will be and install a Universal Base at each of those stud locations. Ensure the screw flange is flush with the edge of the stud, so the teeth channel is centered within the stud. Please see the Side Connection section for details (Fig. 21).

   Install a Universal Base along the top of the entire length of the SlatWall installation area. Please see the Top Connection section for details (Fig. 21).

4. Install your Trusscore Wall&CeilingBoard panels as previously detailed, leaving an opening for your SlatWall installation as determined by the spacing guidance provided in Step 1 (Fig. 18).

Please see the Wall Installation section of this installation guide for detailed instructions on how to install Trusscore Wall&CeilingBoard on walls.

Bottom Connection

Trusscore SlatWall is designed to easily install directly above vertically and horizontally oriented Trusscore Wall&CeilingBoard panels. [Watch How]

When installing the SlatWall panels in a vertical Wall&CeilingBoard install, rest the bottom lip on the back of the SlatWall panel directly on top of the Wall&CeilingBoard panel below it (Fig. 22 & Fig. 23). Once in place, use a level to ensure it is horizontally level before fastening.

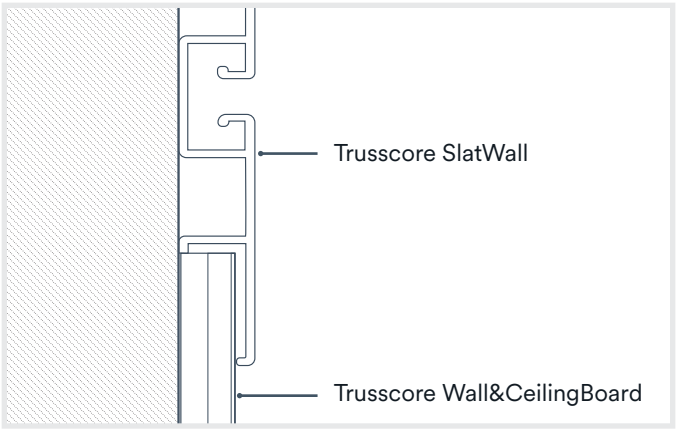

Fig. 22

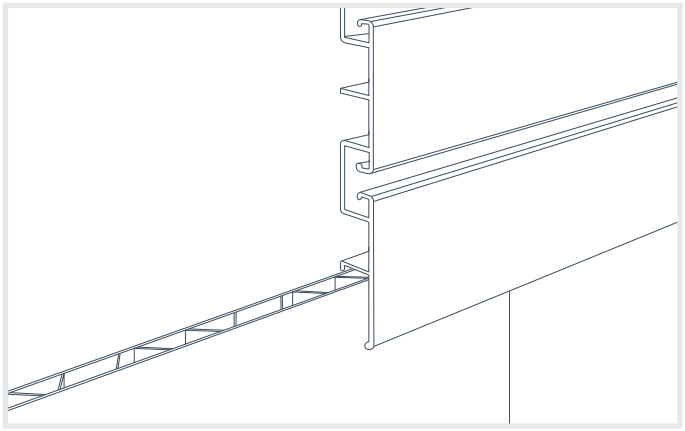

Fig. 23

When installing the SlatWall panels in a horizontal Wall&CeilingBoard install, there are two possible installation configurations depending on the intended height of the bottom SlatWall panel from the ground.

a. The distance from the floor to the bottom of the first SlatWall panel is an even increment of 16" (the width of the exposed face of Wall&CeilingBoard panels). The resulting connection between SlatWall and Wall&CeilingBoard is shown below (Fig. 24).

b. If the desired distance from the floor to the bottom of the first SlatWall panel is not an even multiple of 16", the Wall&CeilingBoard panel closest to the floor should be ripped to an appropriate width to achieve the desired SlatWall height (Fig. 25). The resulting connection between SlatWall and Wall&CeilingBoard is shown below.

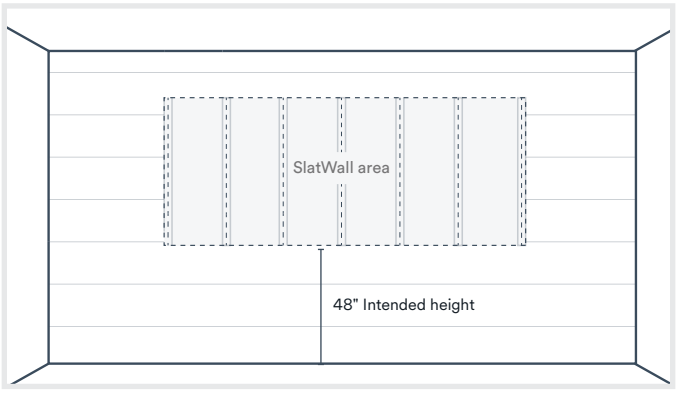

Fig. 24

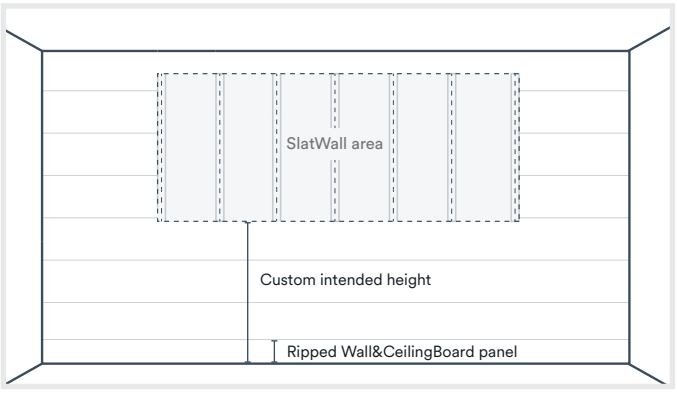

Fig. 25

Please reference the Ripping Panels section of this installation guide for further instruction on performing rip cuts on Trusscore Wall&CeilingBoard panels. [Watch How]

1. Prior to installing the first (bottom) panel of SlatWall, use a level to ensure it is horizontally level before fastening.
2. If your installation is in a space with strong air movement, place a bead of silicone inside the bottom lip of the SlatWall panel where it meets the Wall&CeilingBoard panel(s) (Fig. 26). This ensures the panel will remain fixed in place. This is step is optional.
3. Fasten the SlatWall panel to the wall through the screw flange and into each available stud.

⚠ Do not overtighten the screws as this will disrupt the installation of subsequent panels

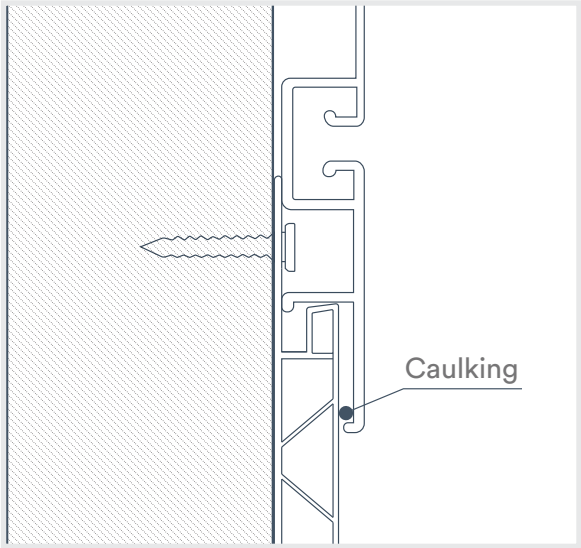

Fig. 26

Installing the Remaining Trusscore SlatWall Panels

Starting from the bottom, proceed with installing the remaining SlatWall panels.

1. Place a panel on top of the previously installed panel, aligning the ends of both panels (Fig. 27)
2. Starting at one end and moving to the other, apply gentle downward pressure (towards the floor) to interlock the panel with the previously installed panel below. You will feel and hear a “snap” when the panels have properly interlocked together (Fig. 28)
3. Fasten the panel you just placed into position with a screw through the slotted screw flanges into each of the studs you marked in an earlier step.
4. Repeat steps 1-3 above step for all remaining panels.

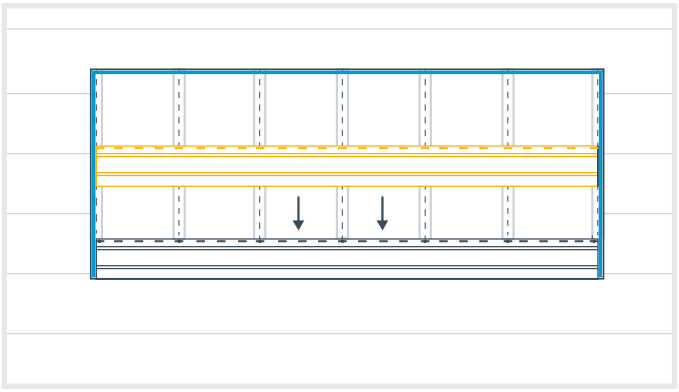

Fig. 27

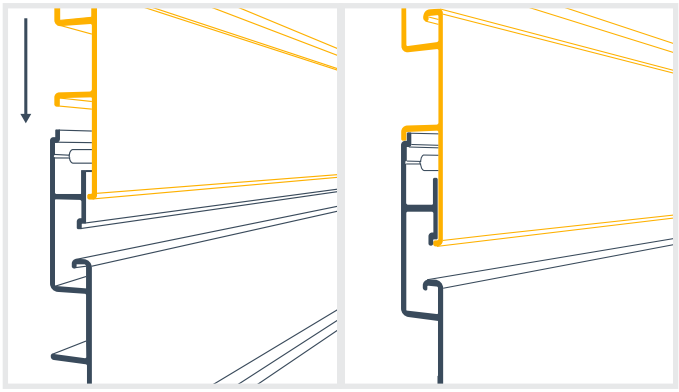

Fig. 28

Side Connections

A **Snap-In H Trim** accommodates the transition between the ends of SlatWall panels and any adjacent Trusscore Wall&CeilingBoard panels.

There are two components to a Snap-In H Trim:

- Snap-In H Trim
- Universal Base

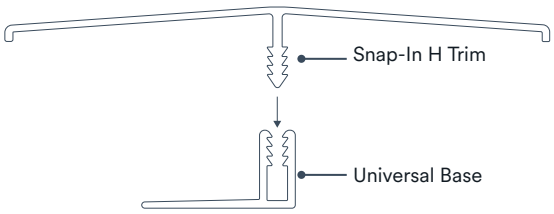

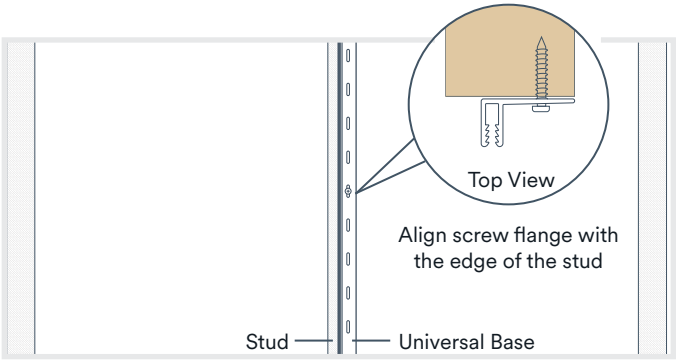

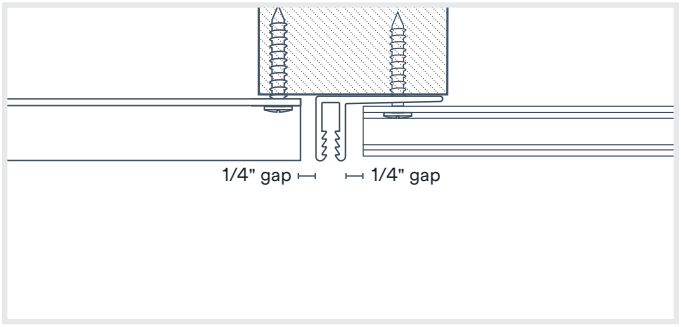

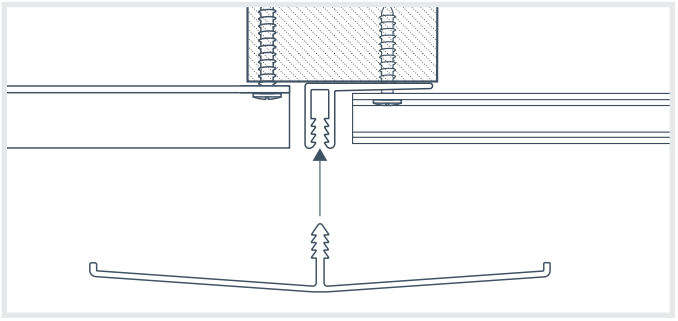

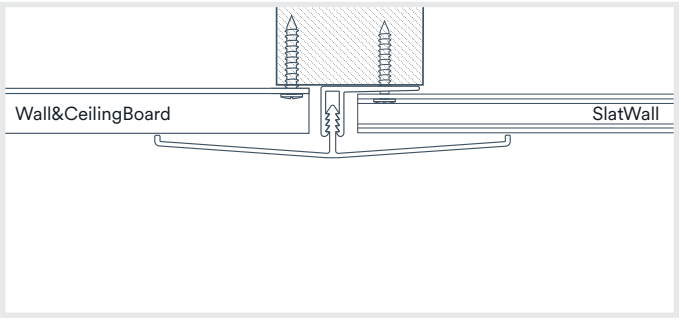

1. Place the Snap-In H Trim up to your installation area and make a mark where it meets the bottom edge of the bottom most SlatWall panel. Cut the Snap-In H Trim square at this mark.
2. On the side with the teeth, measure and mark 1-1/4" inwards from the bottom edge (end) of the Snap-In H Trim. At the mark, make a vertical snip in the teeth using tin snips or an oscillating multi-tool (Fig. 29).
3. Using the tip of the tin snips or the oscillating multi-tool, remove the remaining teeth material between your vertical snip and the bottom edge (end) of the trim (Fig. 30). The remaining material should be small enough to allow the Snap-In H Trim piece to sit flush overtop of the Trusscore Wall&CeilingBoard panel below it, without obstruction.

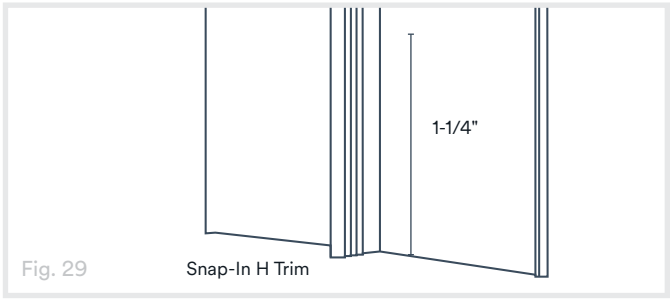

Fig. 29

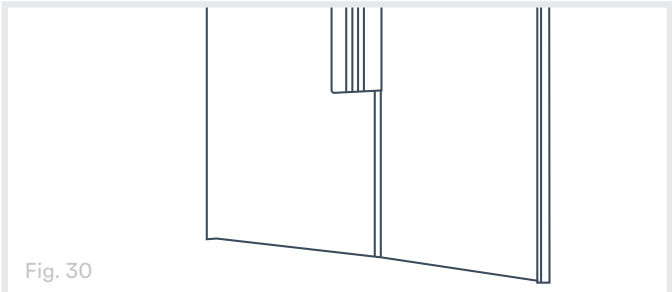

Fig. 30

Installing SlatWall in the Corner of a Room

Snap-In J Trim

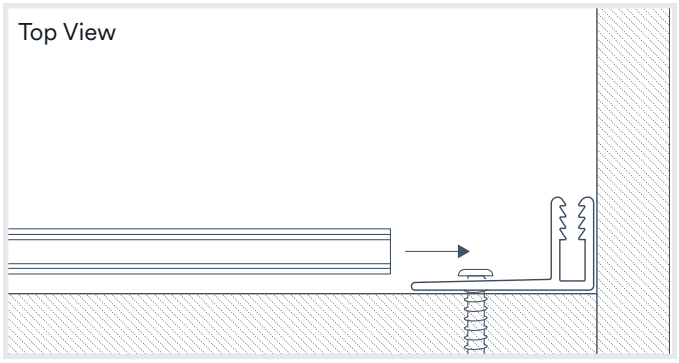

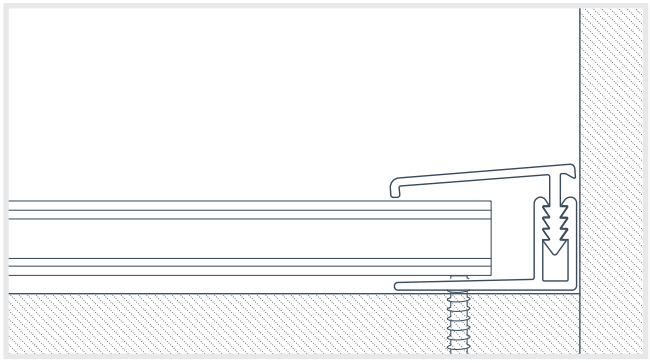

Snap-In Inside Corner Cove Trim



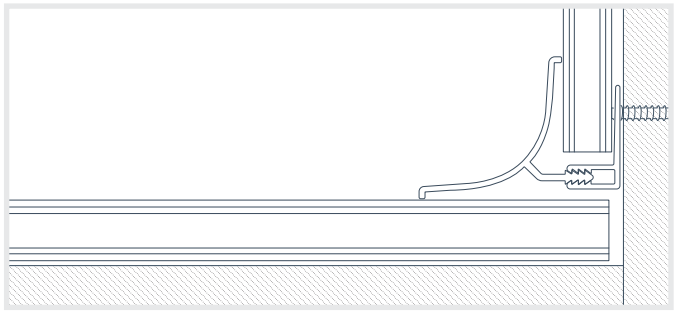

Top Connection

A **Snap-In H Trim** accommodates the transition between the top of SlatWall panels and any adjacent Trusscore Wall&CeilingBoard panels.

There are two components to a Snap-In H Trim:

- Snap-In H Trim
- Universal Base

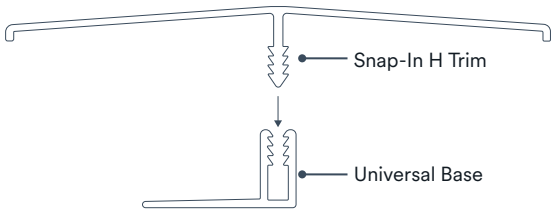

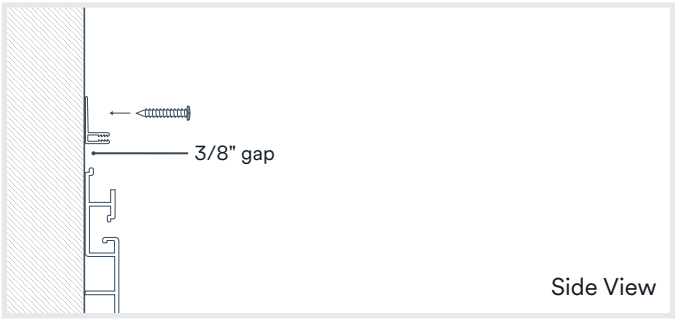

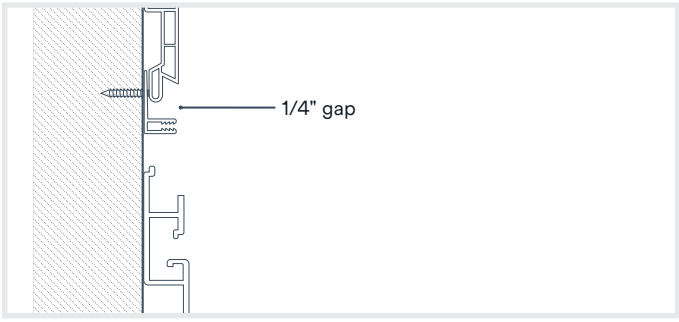

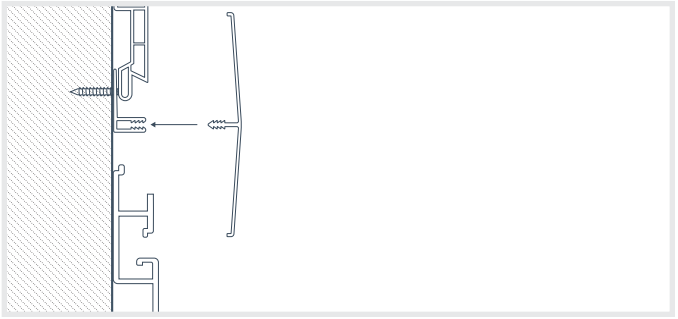

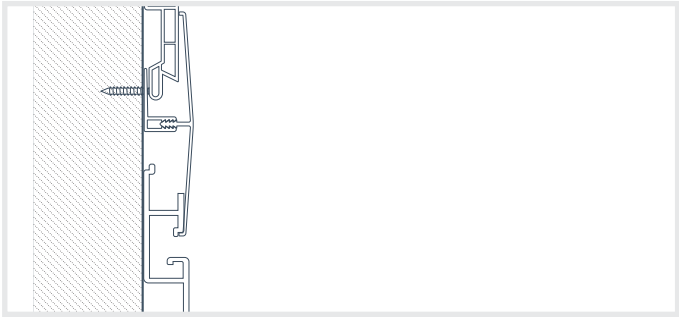

1. Position the Universal Base 3/8" above the top of the SlatWall panel to ensure that when the Snap-In H Trim is inserted in place, the lip at the outer edge of the Snap-In H Trim aligns with the top row groove of the SlatWall panel (Fig. 31). Leave a gap of approximately 1/4" between the teeth channel of the Universal Base and the Wall&CeilingBoard installed above the SlatWall area.

2. Alternatively, for horizontal Wall&CeilingBoard installs only, the tongue of the first Wall&CeilingBoard panel at the top can be inserted directly into the channel of the uppermost SlatWall panel without using Snap-In H Trim (Fig. 32).

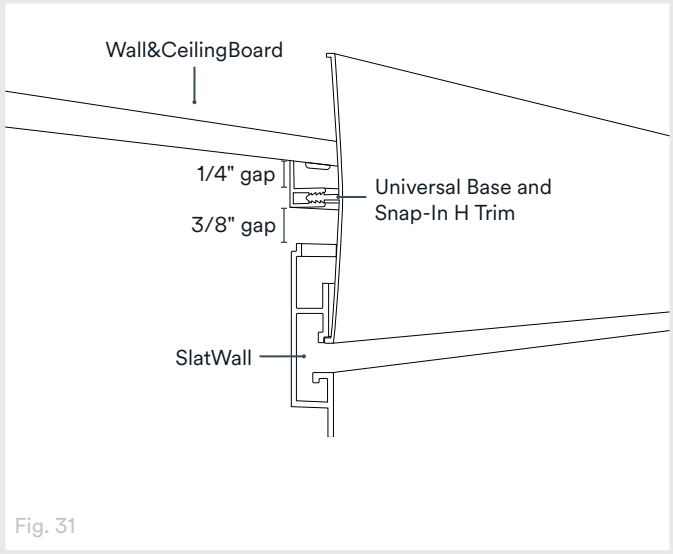

Fig. 31

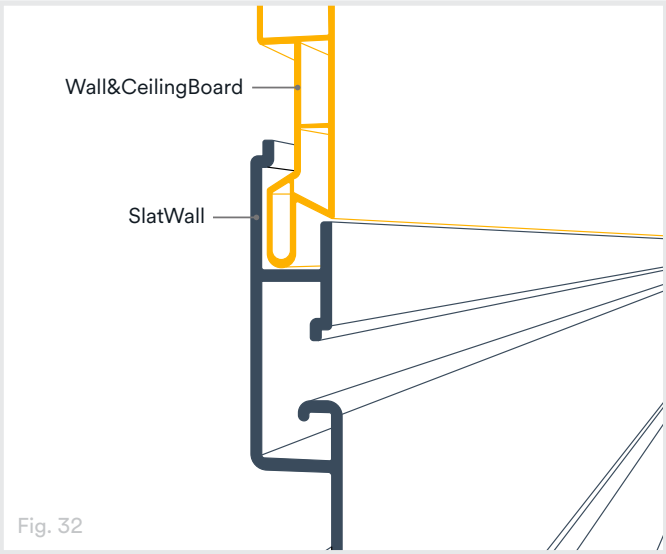

Fig. 32

Trim Applications

Installation Tips

The instructions provided in this guide are for Trusscore Snap-In Trims. There are likely installation scenarios where other trim options can be used, and those are covered in this next section.

Installation Tips	
Cutting	· Tin snips are the safest and easiest tool to use when cutting Snap-In J Trim. It is recommended to measure and mark your cut lines on the fully assembled trim first, then disassemble and cut each piece separately using tin snips · A hand held circular saw or miter saw is recommended to cut Snap-In Inside Corner Cove, Snap-In H, Outside Corner Square, Outside Corner Rounded, and Base Trim. With a saw, it is not necessary to disassemble the Snap-In Trims before cutting
Fastening	· All Trusscore trims, including the Universal Base for Snap-In Trims, should be screwed to the substrate at least once every 24" and at least 4" from the end of the panel. The exception to this is Outside Corner Square Trim, which uses silicone to adhere to panel surfaces
Aesthetics	· If an area requires more than 10' of continuous trim, the trims should be butted tightly together with silicone sealant placed between the two pieces
Waterproofing	· To create a water-tight corner at door and window openings, add a small bead of silicone caulking on the inside of Snap-In Trims before assembling to the Universal Base.

[Trim Overview Video]

High Moisture Applications

To ensure drainage, drill 1/4" diameter holes into the bottom of the Snap-In J Trim after installing it on the bottom of the wall. The Snap-In J Trim must be fully assembled before drilling holes. Holes should be placed 16" apart.

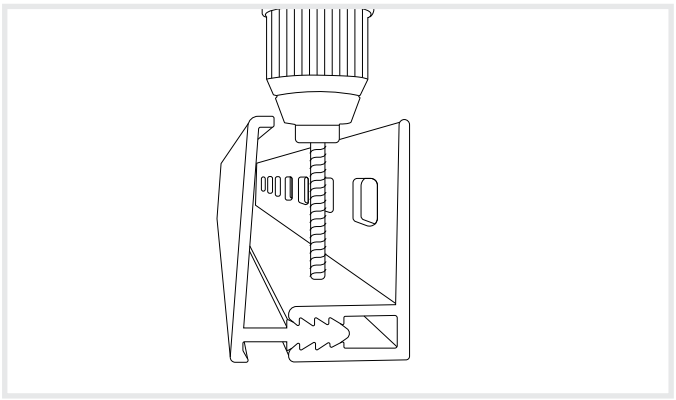

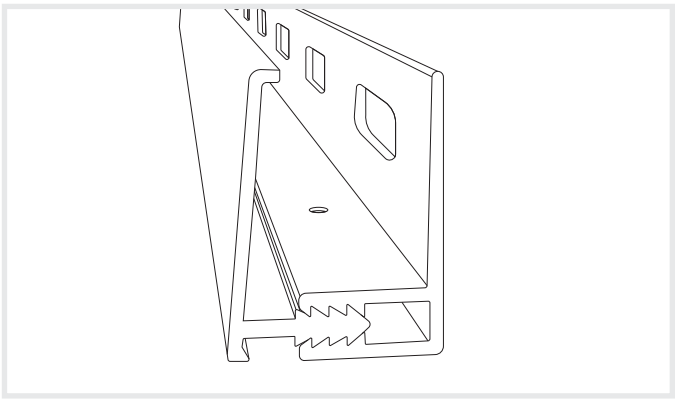

Inside Corners

Snap-In J Trim

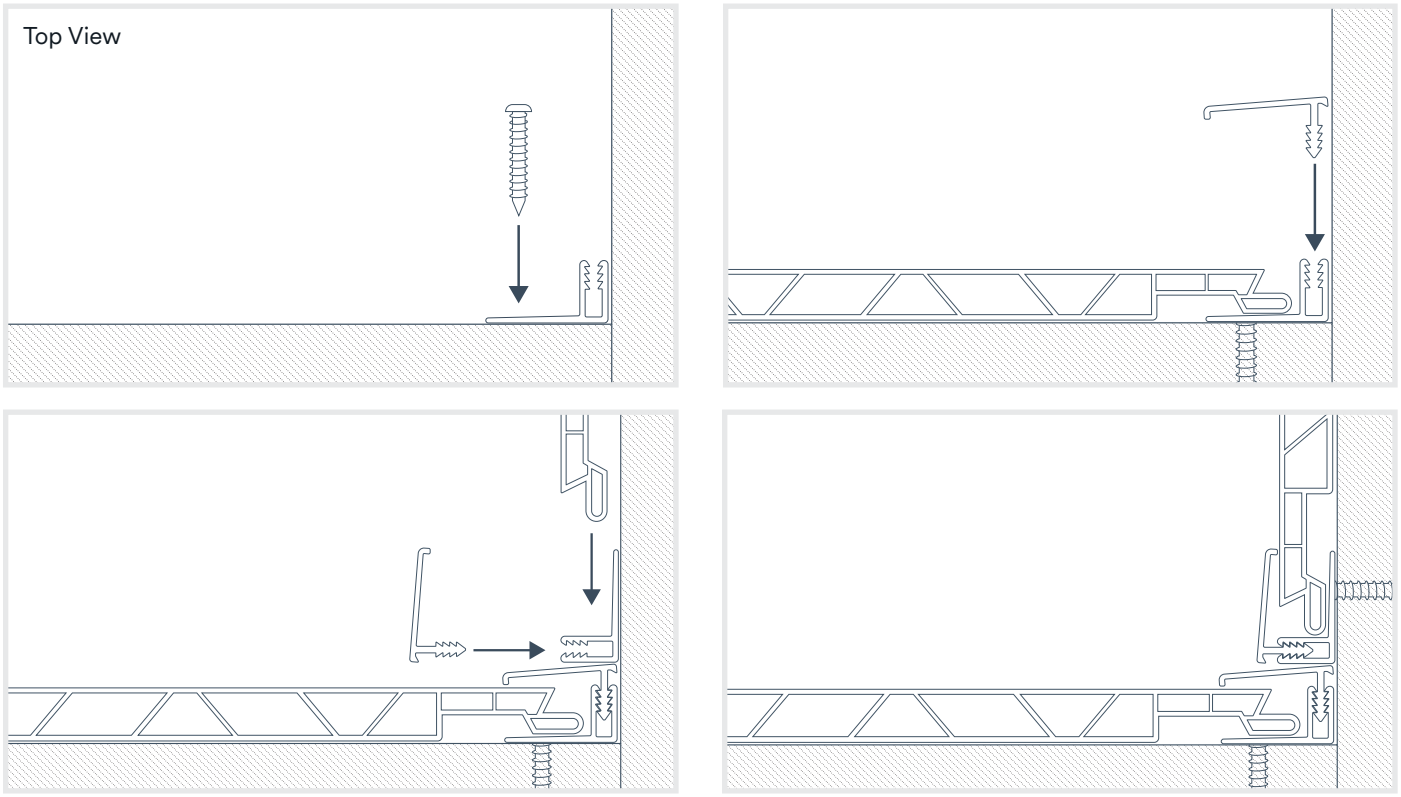

Snap-In Inside Corner Cove Trim

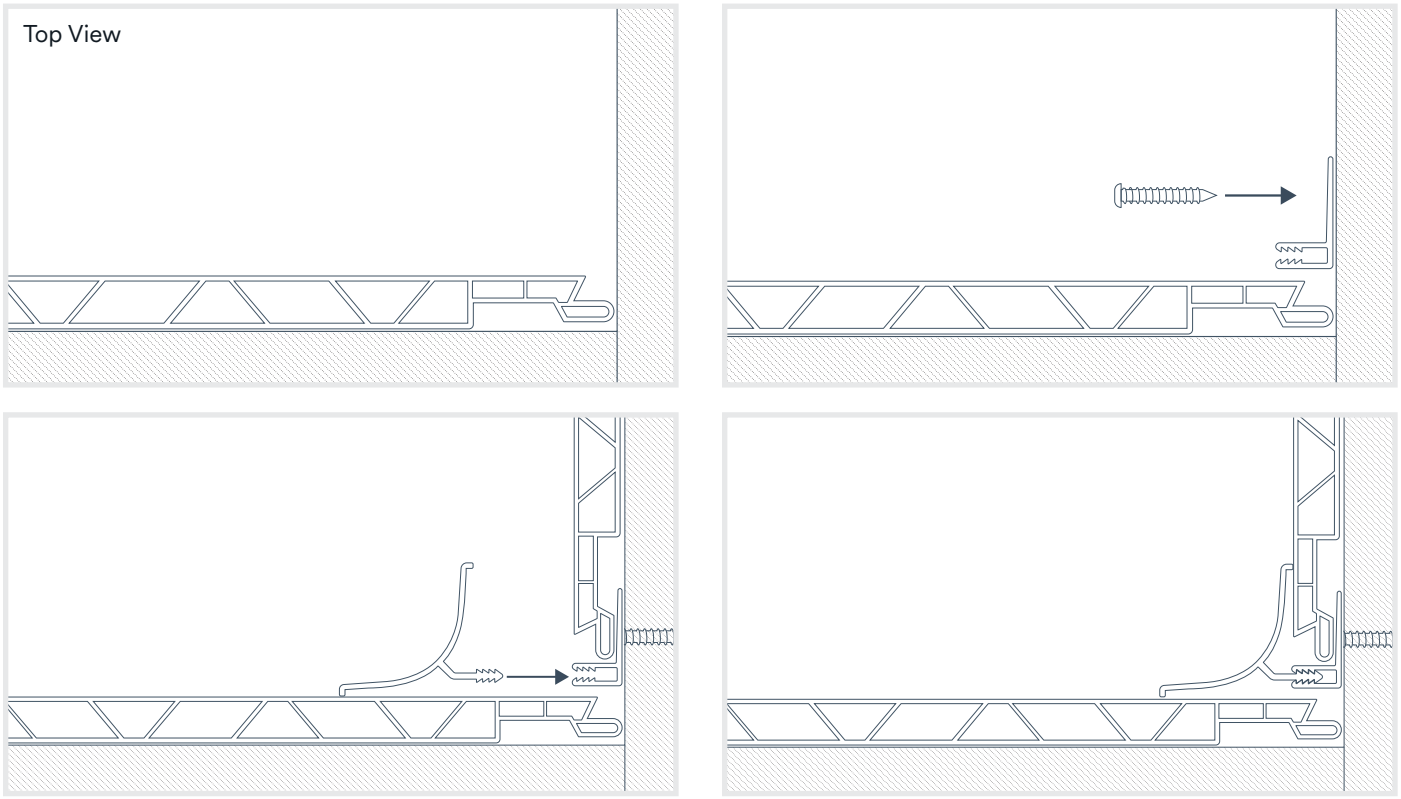

⚠ Note: At the last corner of your room, install a Universal Base before the panels to ensure the Snap-In Inside Corner Cove Trim can be assembled.

Outside Corners

Outside Corner Rounded

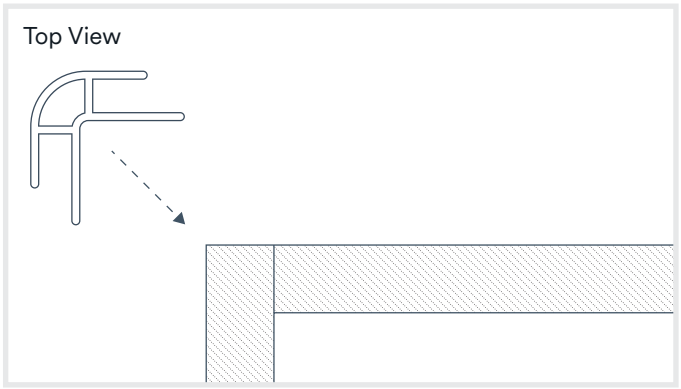

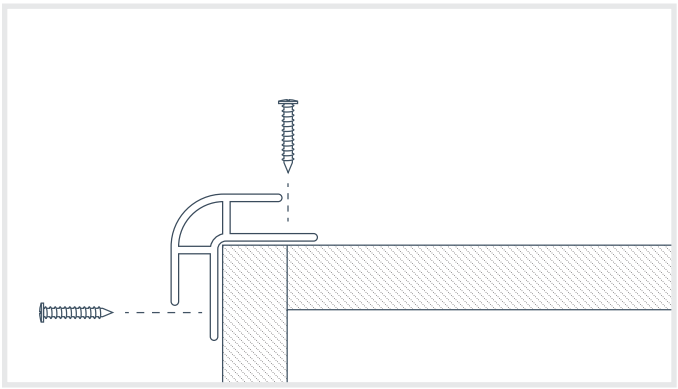

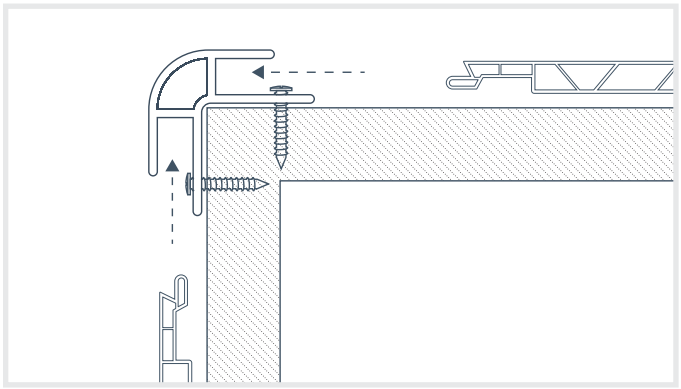

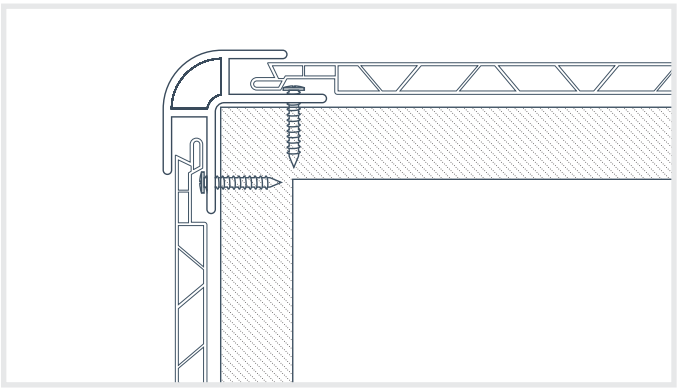

Outside Corner Square

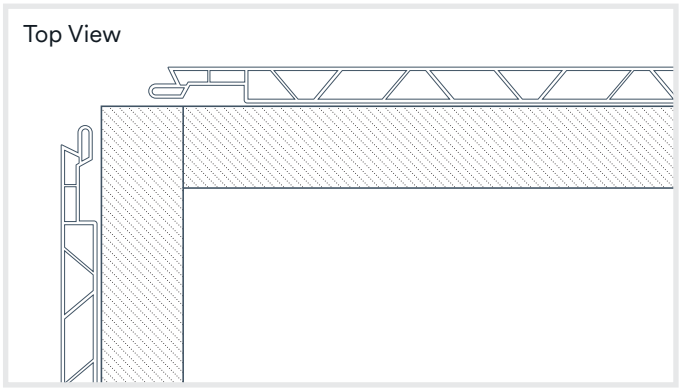

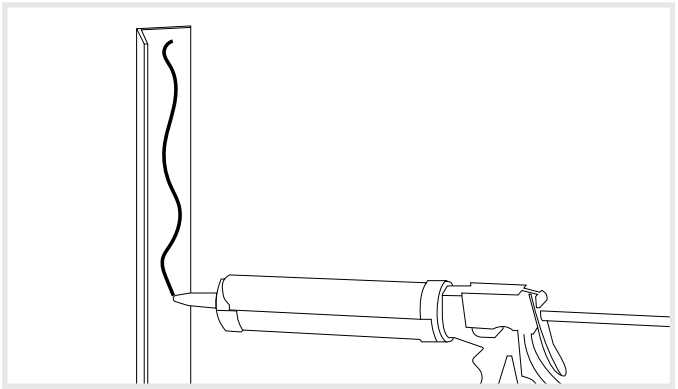

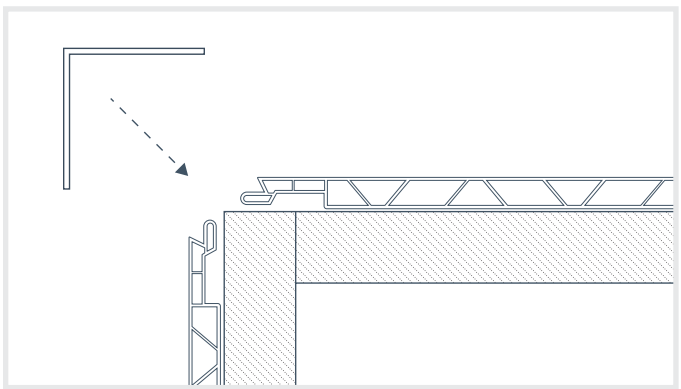

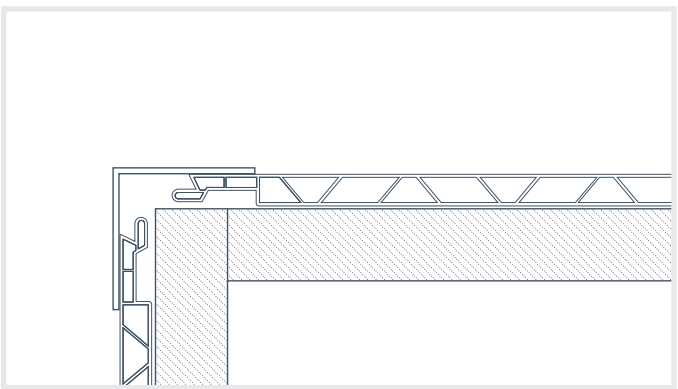

Bottom of Wall

Base Trim

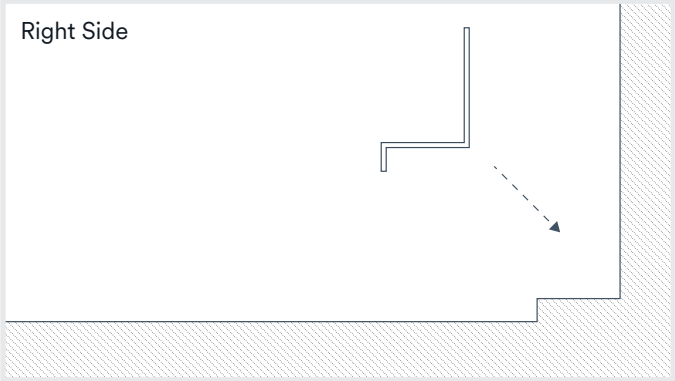

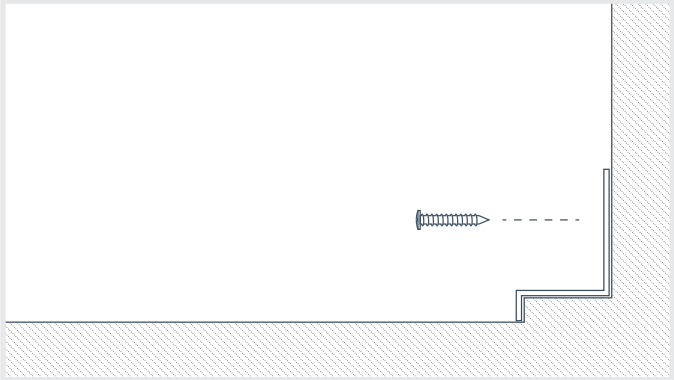

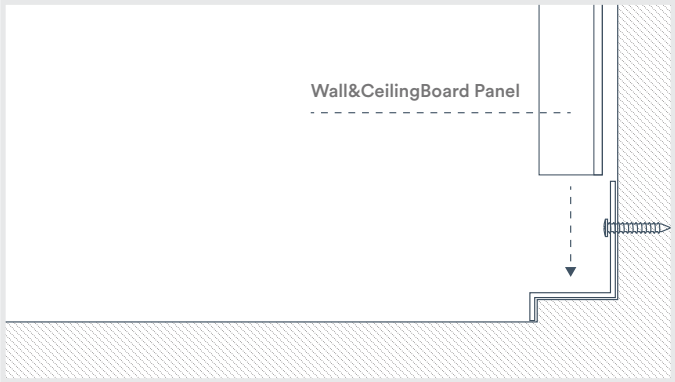



Panel Joints

Snap-In H Trim (Vertical)

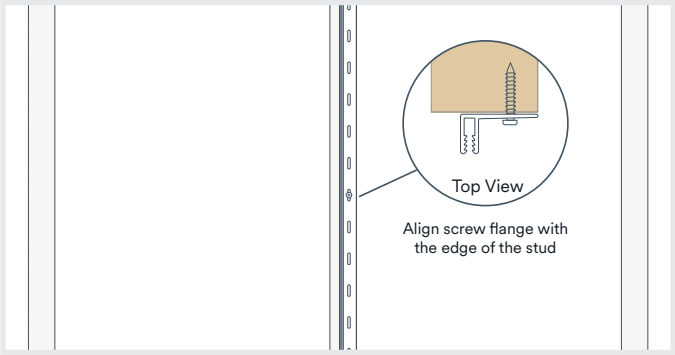

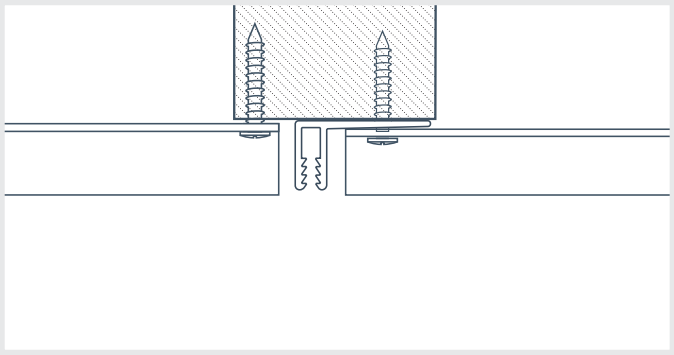

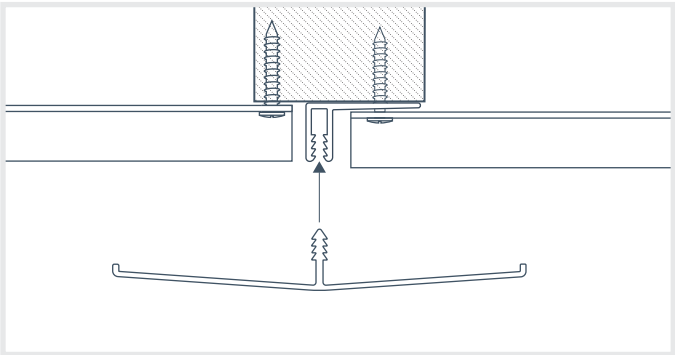

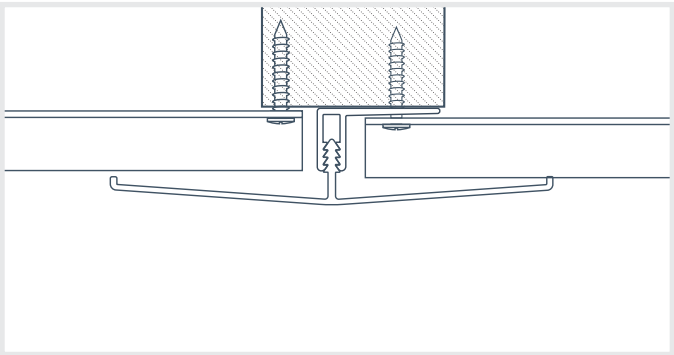

Panel Joints

Snap-In H Trim (Horizontal)

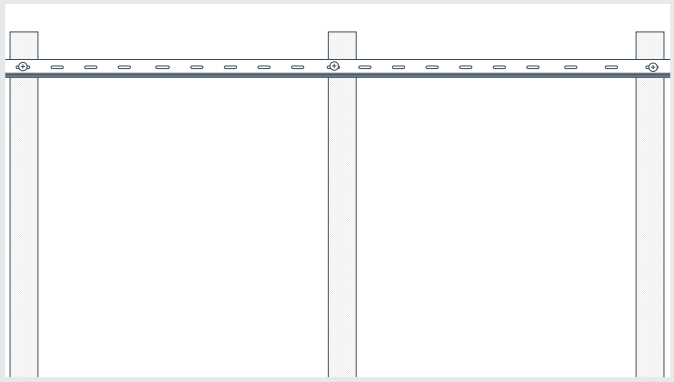

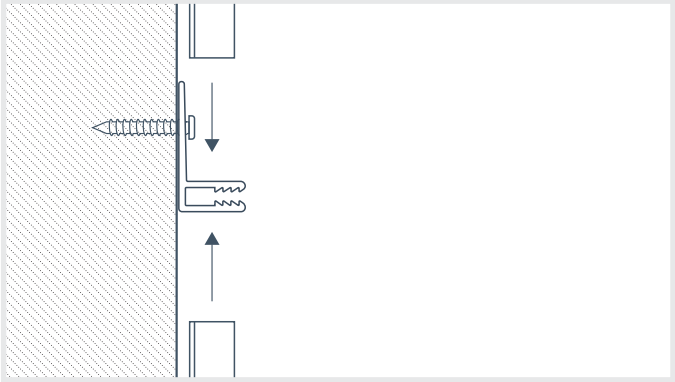

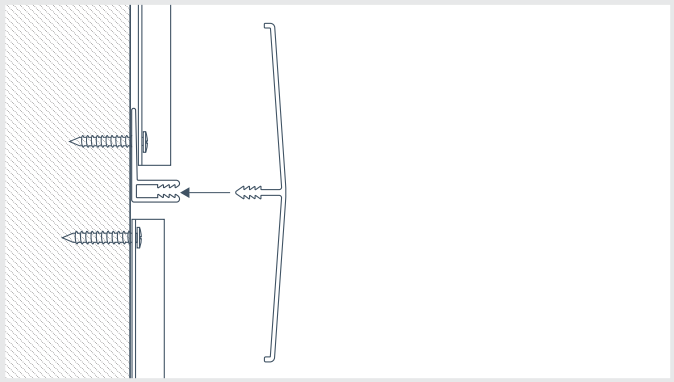

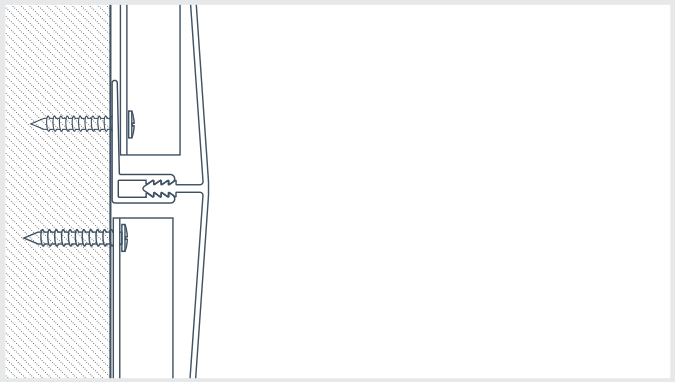

Window & Door Openings

J Trim

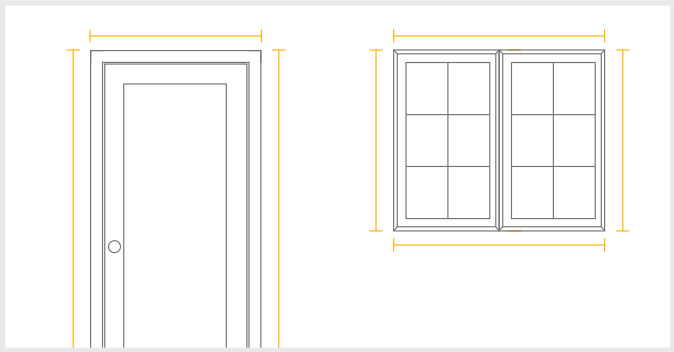

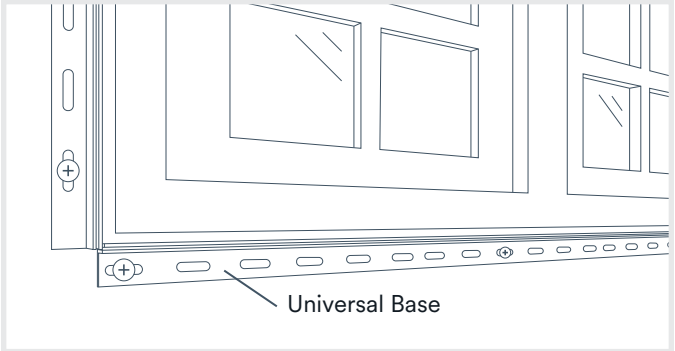

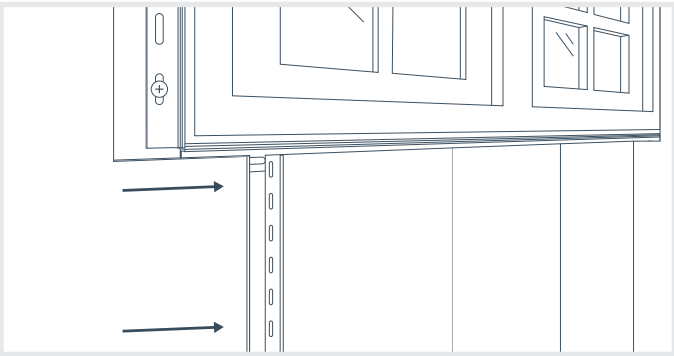

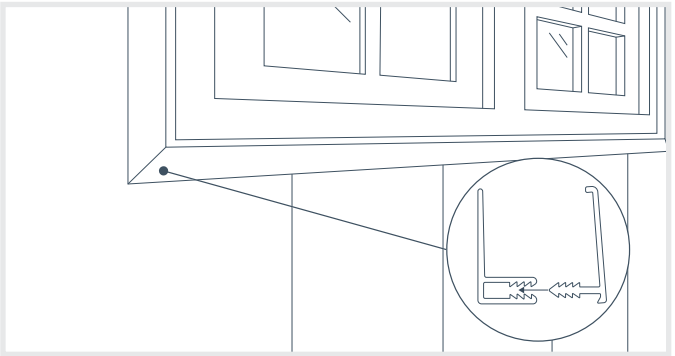

Window & Door Openings

Outside Corner

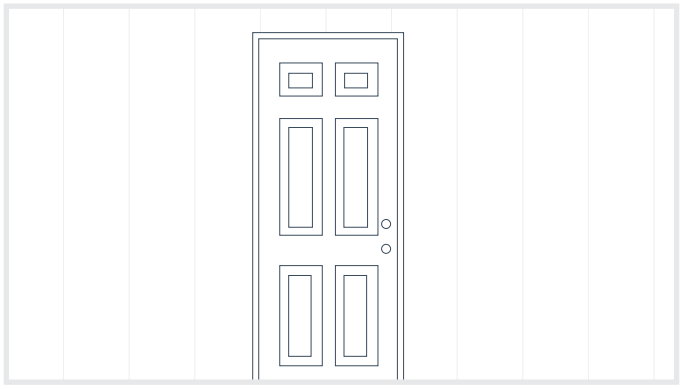

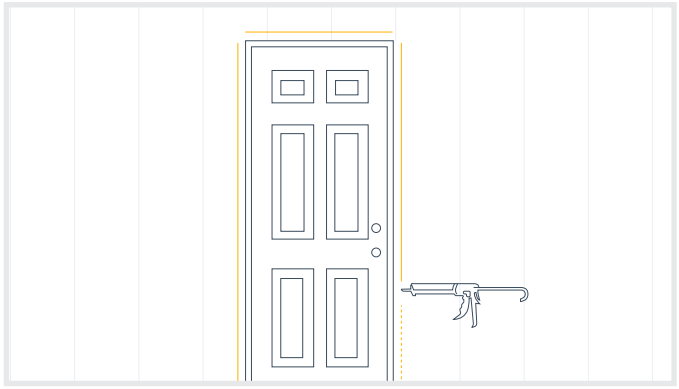

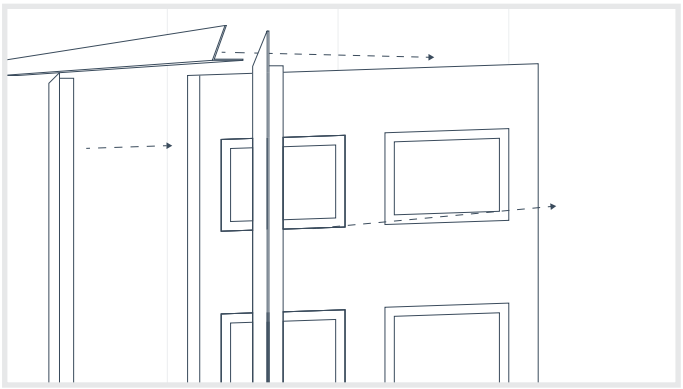

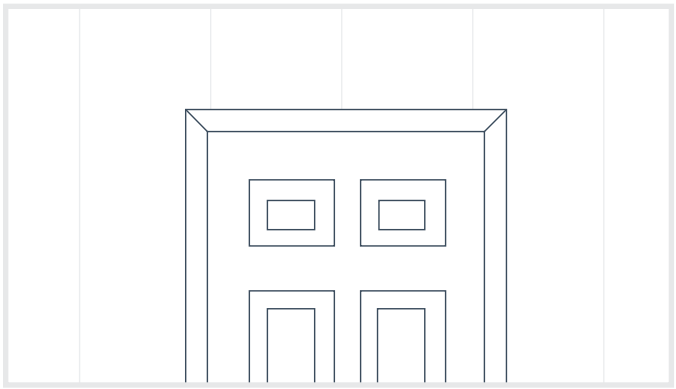

How to Replace a Damaged Panel After Installation [Watch How]

In the unlikely situation where a panel becomes damaged after it's been installed, follow these steps to remove and replace it for a seamless finish.

The tools and materials you will need are:

- Handheld Circular Saw
- Tape Measure
- Power Drill
- Tin Snips
- Putty Knife
- Silicone (Clear or White)
- Trusscore Wall&CeilingBoard (that matches the length of the damaged panel)

1. Set the depth of the handheld circular saw to half an inch, which is the thickness of a Trusscore Wall&CeilingBoard panel
2. Using the saw, cut through the center of the damaged panel, parallel to the panel joints (Fig. 33).

   Pro Tip: Stop cutting as you approach the ceiling, floor, or wall and carefully remove the panel from the trims using a putty knife prior to cutting the remaining panel at each end.

   If Snap-In Trims were used, disassemble the top piece of the Snap-In Trim from the Universal Base by starting at the end of the trim piece and working your way along the length until the trim is fully removed. Use a pair of needle nose pliers to get a better grip on the trim piece.
3. The side of the panel with the tongue should easily slide out of the adjacent panel (Fig. 34).
4. On the groove side that remains, make another cut 3/4" away from the panel joint in the direction of the previous cut (Fig. 35).
5. Now, tilt the adjacent panel out of the way and remove the screws from the damaged panel (Fig. 36).
6. Cut the screw flange off the replacement panel as close to the panel body as possible. It is recommended to use tin snips for this step (Fig. 37).

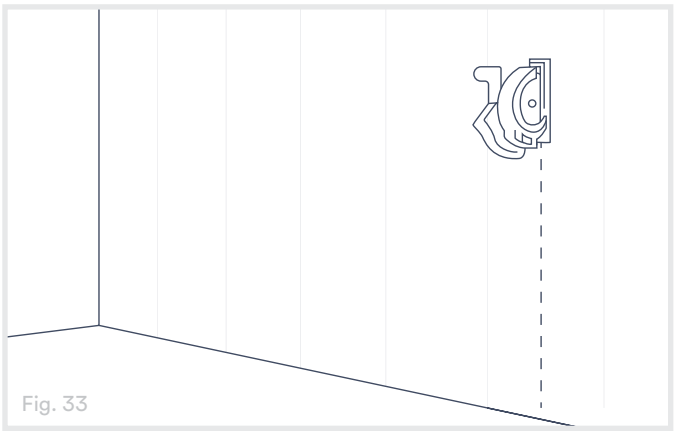
Fig. 33

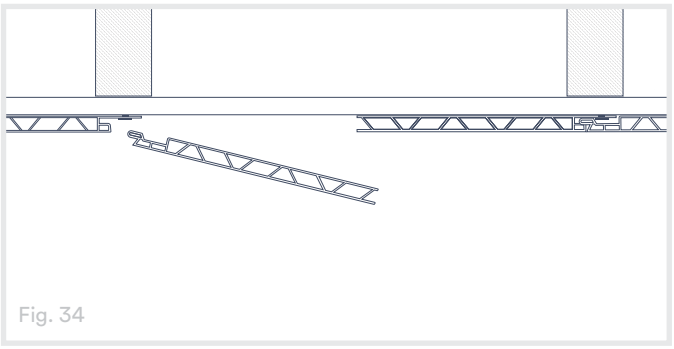
Fig. 34

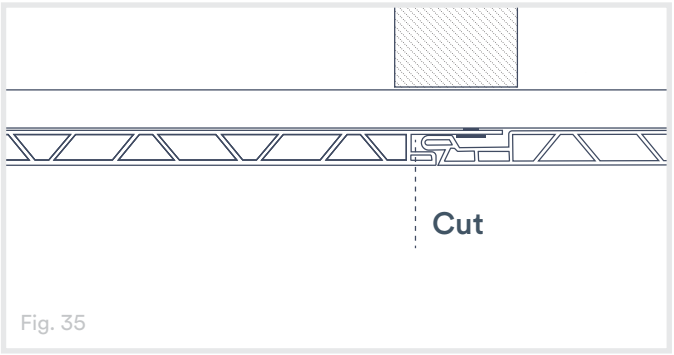

Fig. 35

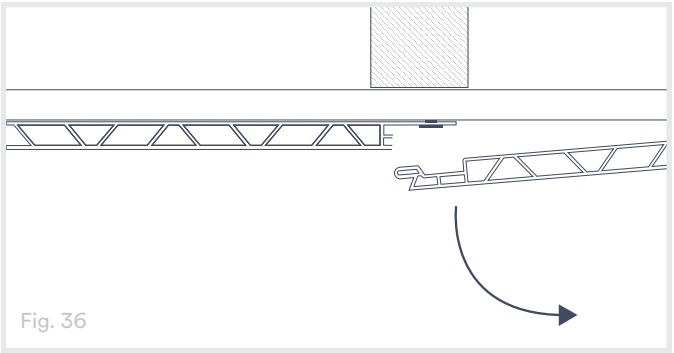
Fig. 36

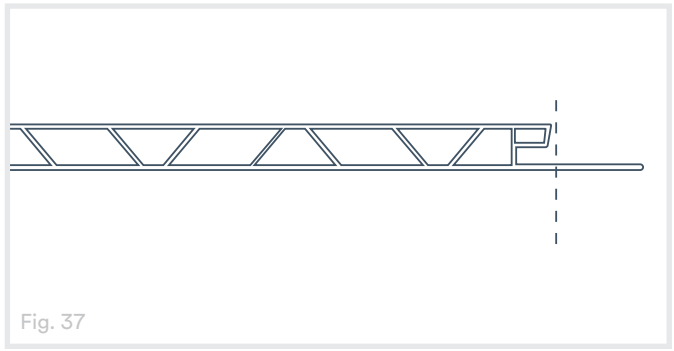
Fig. 37

7. Lift the tongue of the existing adjacent panel and apply a 1/2" thick bead of silicone along the stud behind it (Fig. 38).

8. Then apply a smaller, 1/4" thick bead of silicone directly on top of the tongue of the existing adjacent panel (Fig. 39). If you're using a backer, applying silicone to the back of the replacement panel is also recommended (Fig. 40).

9. Insert the tongue end of the replacement panel first, using a putty knife to pry open any adjacent trims if needed (Fig. 41). Then, simply place the groove end of the replacement panel on top of the tongue (with the bead of silicone) of the adjacent panel (Fig. 42).

10. Apply moderate uniform pressure along the seam of the replacement panel and the adjacent panel where the silicone was used to ensure the best adhesion (Fig. 43). If using a backer, apply the same pressure across the face of the replacement panel as well. Wipe away any excess silicone from the joint. If using Snap-In Trim assemble it to complete the installation.

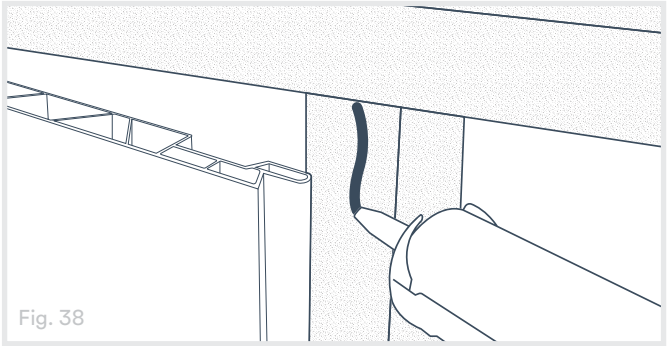
Fig. 38

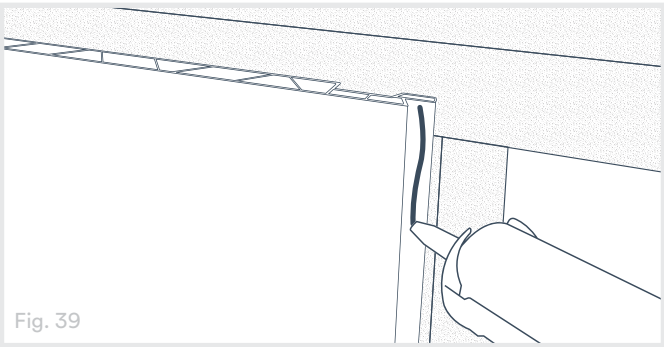
Fig. 39

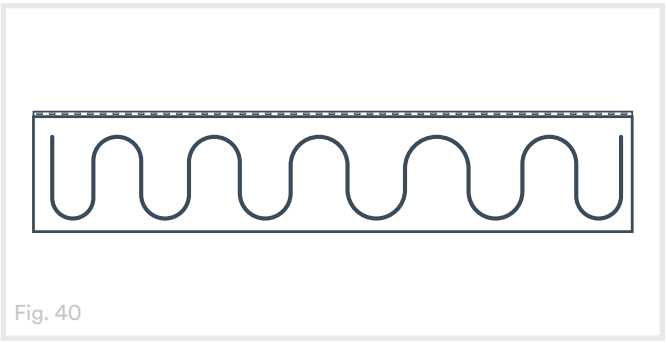
Fig. 40

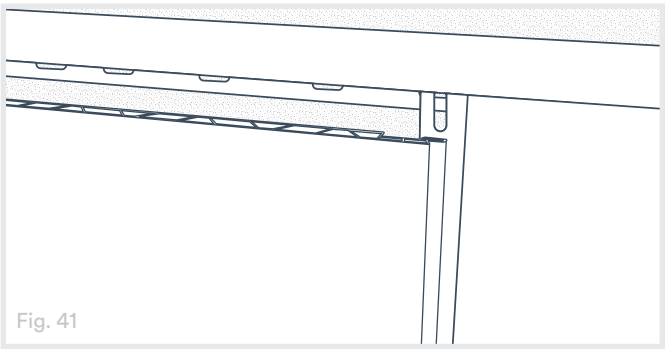
Fig. 41

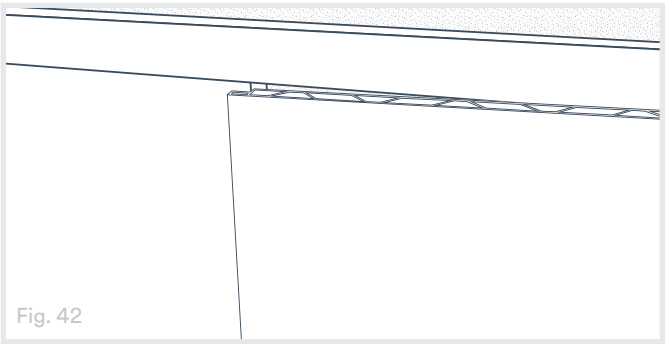
Fig. 42

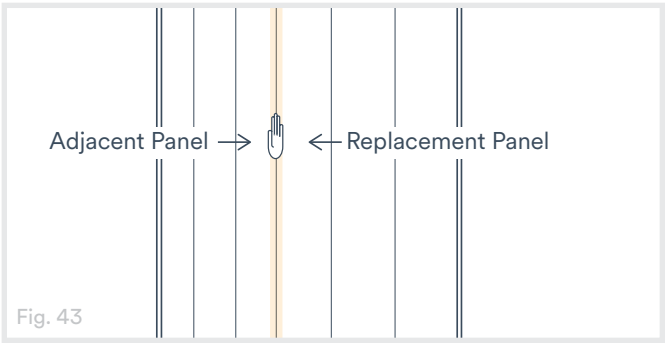

Fig. 43

How to Fasten Items (Pictures, Shelves) to Trusscore Wall&CeilingBoard

If you're looking to decorate or organize your space by hanging some pictures or shelving, we recommend using Trusscore SlatWall, which integrates seamlessly with Trusscore Wall&CeilingBoard panels. We offer a wide range of SlatWall accessories including hooks, baskets, and shelves that snap into place with ease.

The tools and materials you will need are:

- Chosen Mounting Device
- Tape Measure
- Power Drill
- Power Drill
- Screwdriver (Phillips)
- Stud Finder
- Handheld Saw
  (ie. multi-tool oscillaiting saw, or jig saw)

When hanging an item directly on a Trusscore Wall&CeilingBoard panel, items should never be directly fastened without back-support.

When hanging lightweight items (ie. less than 30 lbs) directly from Trusscore Wall&CeilingBoard, we recommend using adhesive hooks such as Command™ Hooks or using spring toggle bolt kits (Fig. 44).

Installing Spring Toggle Bolts

1. Drill a hole through the Trusscore Wall&CeilingBoard and any backer material if applicable (Fig. 45). The hole size is dependent on the size of the toggle bolt you are using. This should be indicated on the toggle bolt packaging.
2. Put the bolt through whatever mounting device you are using and ensure the end of the bolt is screwed into the center of the toggle so that the wings can be folded down on to the threads of the bolt (Fig. 46).
3. Fold the winds down and insert the end of the bolt into the hole. Push the entire assembly into the hole until you feel the wings pop out behind the Wall&CeilingBoard panel or backer material (Fig. 47).
4. Lightly pull forward on the entire assembly until you feel the wings grip against the back of the Wall&CeilingBoard panel or backer material and then proceed to tighten the bolt until the assembly is tight to the wall (Fig. 48).

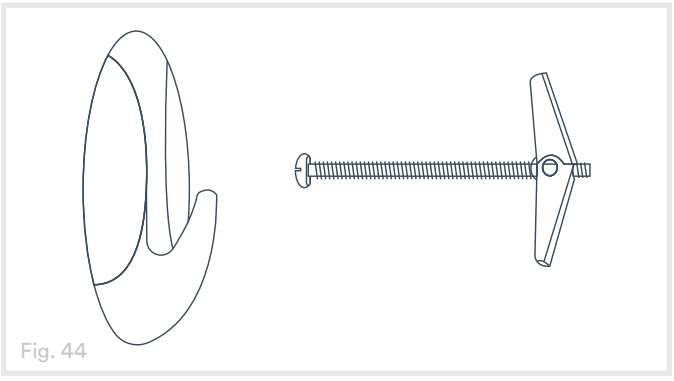
Fig. 44

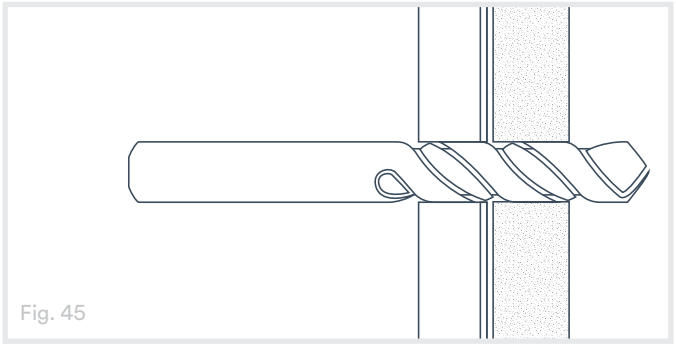
Fig. 45

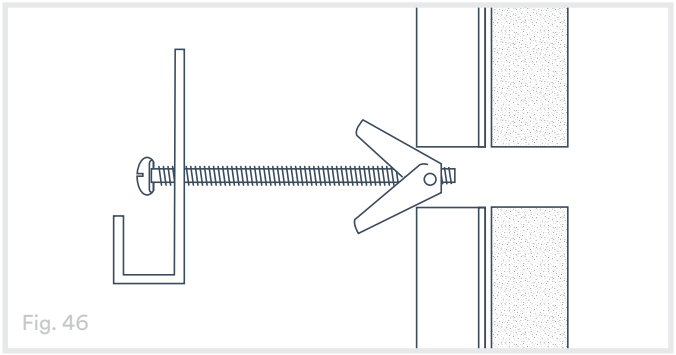
Fig. 46

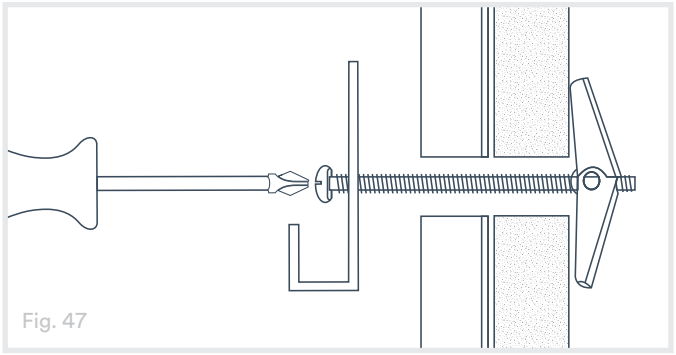
Fig. 47

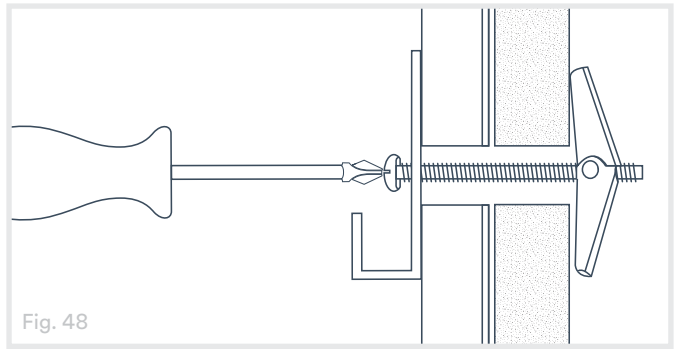
Fig. 48

Moderate weight items (between 30 and 50 lbs) (Fig. 49) should be fastened directly to the supporting structure of the wall or ceiling (i.e., studs or joists through the Trusscore panel (Fig. 50). [Watch How] Mounting holes should be slightly oversized to accommodate expansion and contraction of the product.

Wall stud locations can be found at the seams of Wall&CeilingBoard panels when installed vertically (Fig. 51). When panels are installed horizontally on the wall or in the case of ceilings where panels are often installed perpendicular to the joists, a stud finder or a strong magnet can be used to locate screws indicating a stud or ceiling joist location (Fig. 52).

Heavy Items

Heavyweight items (over 50 lbs) should be mounted directly to the supporting structure to avoid crushing your Trusscore panels.

You can cut away the Trusscore at the mounting points and then use metal spacers to keep the heavy items flush to the Trusscore panels but not crush them.

1. Locate the wall studs or ceiling joists as mentioned above.
2. Measure and mark where the mounting poings are located (Fig. 53).
3. Use metal spacers large enough to fit around the mounting screw or bolt provided (i.e., stack of washers or nuts).
4. Using a drill or hole saw, cut holes where the mounting points are located. Mounting holes should be large enough so the spacers fit inside and slightly oversized to accomodate expansion and contraction of the surrounding panels (Fig. 54).
5. Use enough spacers so they protrude from the hole just past the Trusscore panel.
6. Fasten the item to the wall with spacers behind (Fig. 55).


Fig. 49

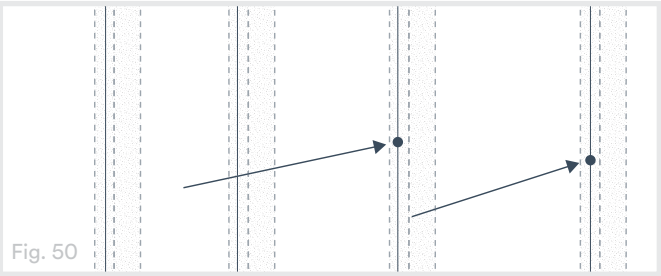
Fig. 50

Top View

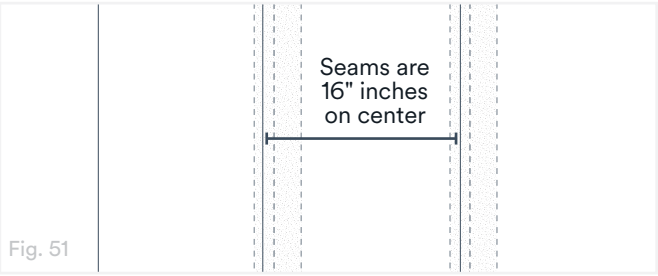

Fig. 51

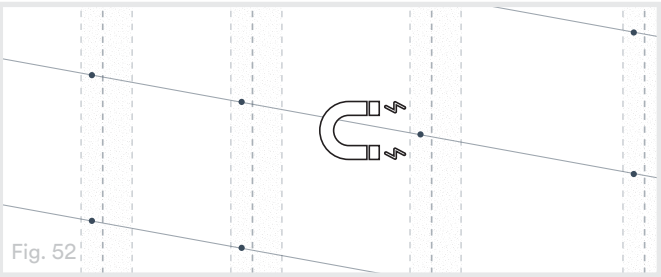
Fig. 52

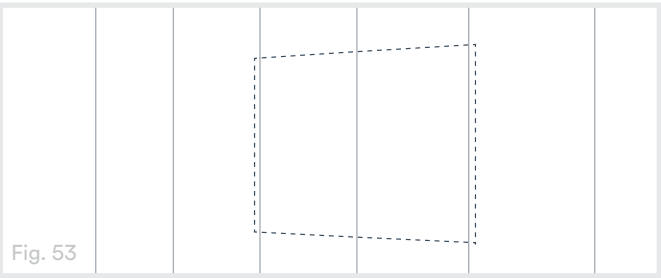
Fig. 53

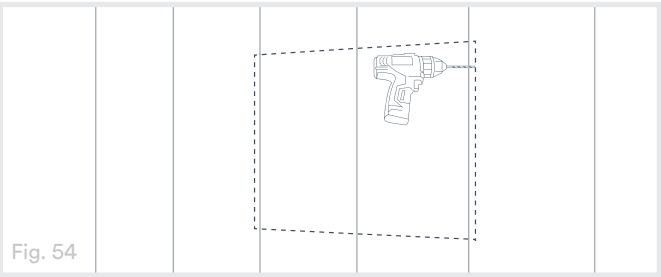
Fig. 54

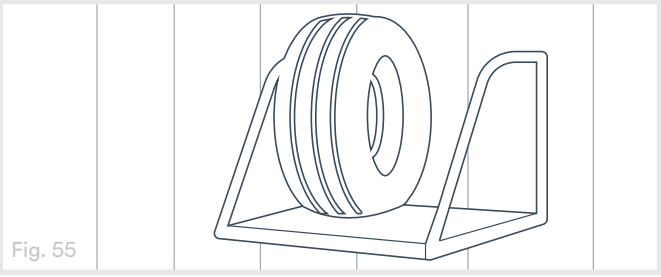
Fig. 55

Cleaning

Here are some guidelines to help you handle any level of dirt your product encounters.

Day-to-Day Cleaning

To remove common dirt and maintain your Trusscore product's beautiful appearance, wash using a sponge or soft cloth and a mild cleaning solution. View the Care & Maintenance Guidelines.

Abrasvie cleaning pads/cloths should be not be used as they could scratch or alter the surface of the product.

If the dirt is difficult to remove, wipe clean with a solution of:

- 1/3 cup laundry detergent (e.g. Tide®)
- 2/3 cup tri-sodium phosphate (e.g. TSP®)
- 3.79 L (1 Gallon) of water

Swiffer® Dusters™ are very helpful in removing dust from Trusscore Wall&CeilingBoard
Mr. Clean® Magic Erasers™ can be used to remove marks on Trusscore Wall&CeilingBoard

Pressure Washing

When hand cleaning doesn't get the job done, pressure washers may be used with mild soap and a sponge or soft cloth, provided the guidelines below are followed:

- Power washing nozzle should be at least 4-6' away from the wall
- Use a small-to-mid-size power washer with less than 3,000 psi
- Use a wide spray nozzle angle (40° or greater is preferred) to distribute the water pressure accross the wall

Disclaimers

The manufacturer is not responsible for problems related to expansion due to temperature fluctuations. If wide temperature fluctuations exist in the area of the Trusscore installation, allow for expansion and contraction gaps in moldings and perimeter. Before installation, Trusscore Wall&CeilingBoards and trims should be acclimatized to minimize expansion and contraction issues.

As part of our focus on continuous innovation, Trusscore leverages advancements in material science to improve the performance and environmental impact of our products. Through the use of zero wastewater production processes, incorporation of recycled material in our products, and commitment to using raw materials with low environmental impact we are developing more sustainable building products.

Our drive to continually develop better-looking, better-performing, and more sustainable products can result in minor changes to the color and texture of our products when compared to previously manufactured products. Therefore, install products of the same package and/or pallet when completing your project to ensure the best possible results to minimize any minor variations.

Specifications

Trusscore Wall&CeilingBoard

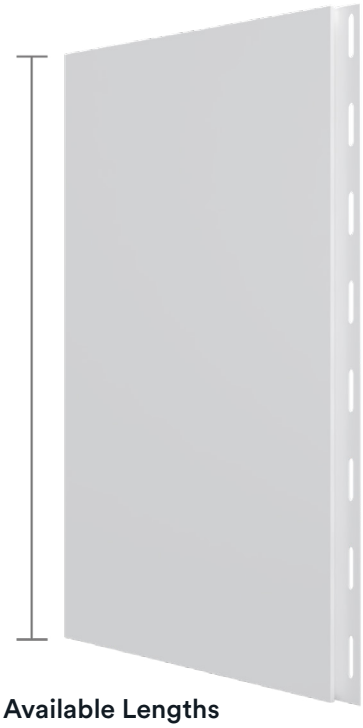

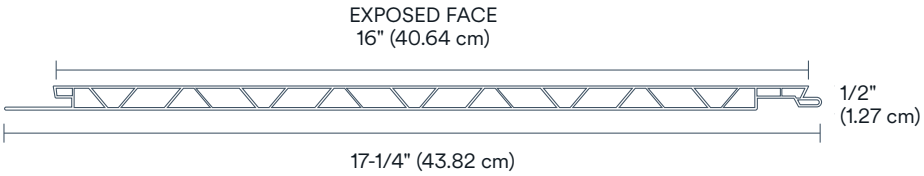

Available Lengths

8', 10', 12', 14', 16', or 20'
(244 cm, 305 cm, 366 cm, 427 cm, 488 cm, 610 cm)

Trusscore SlatWall

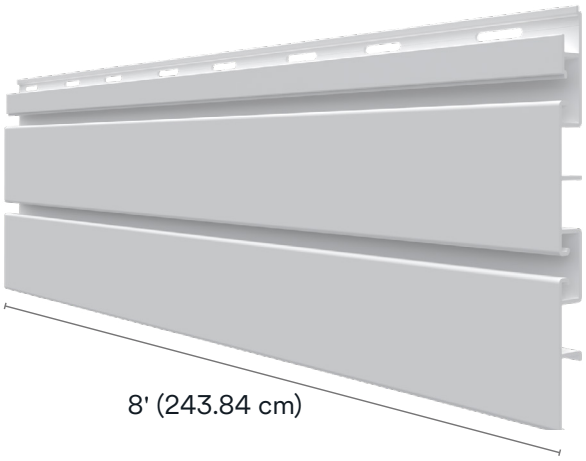

7-1/4"
(18.42 cm)



Trim Dimensions - Snap-In Trims

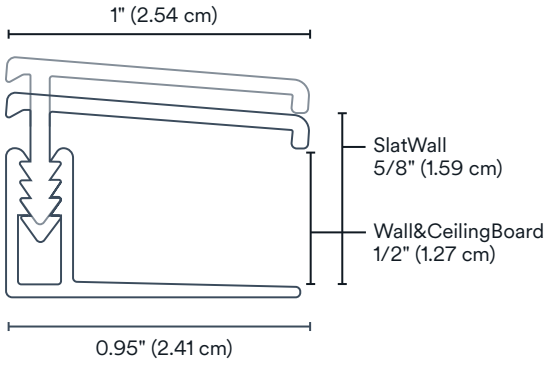

Snap-In J Trim

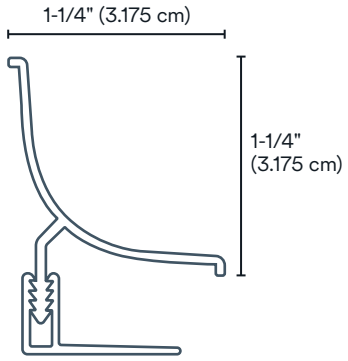

Snap-In Inside Corner Cove Trim

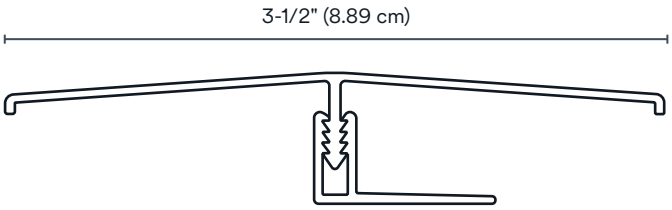

Snap-In H Trim

Additional Trusscore Trims

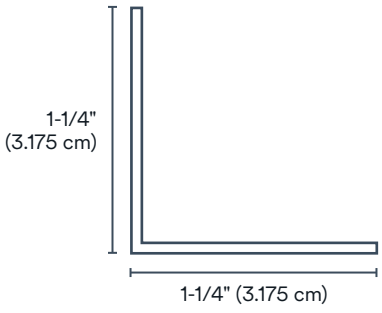

Outside Corner Trim

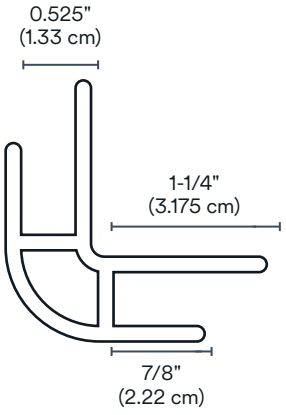

Outside Corner Rounded Trim

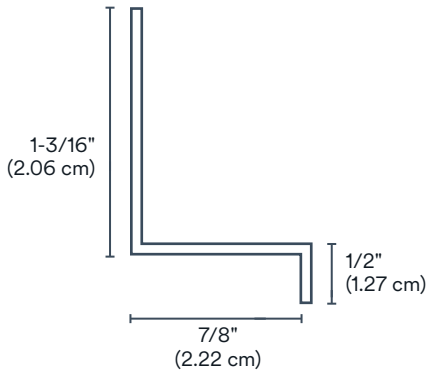

Base Trim

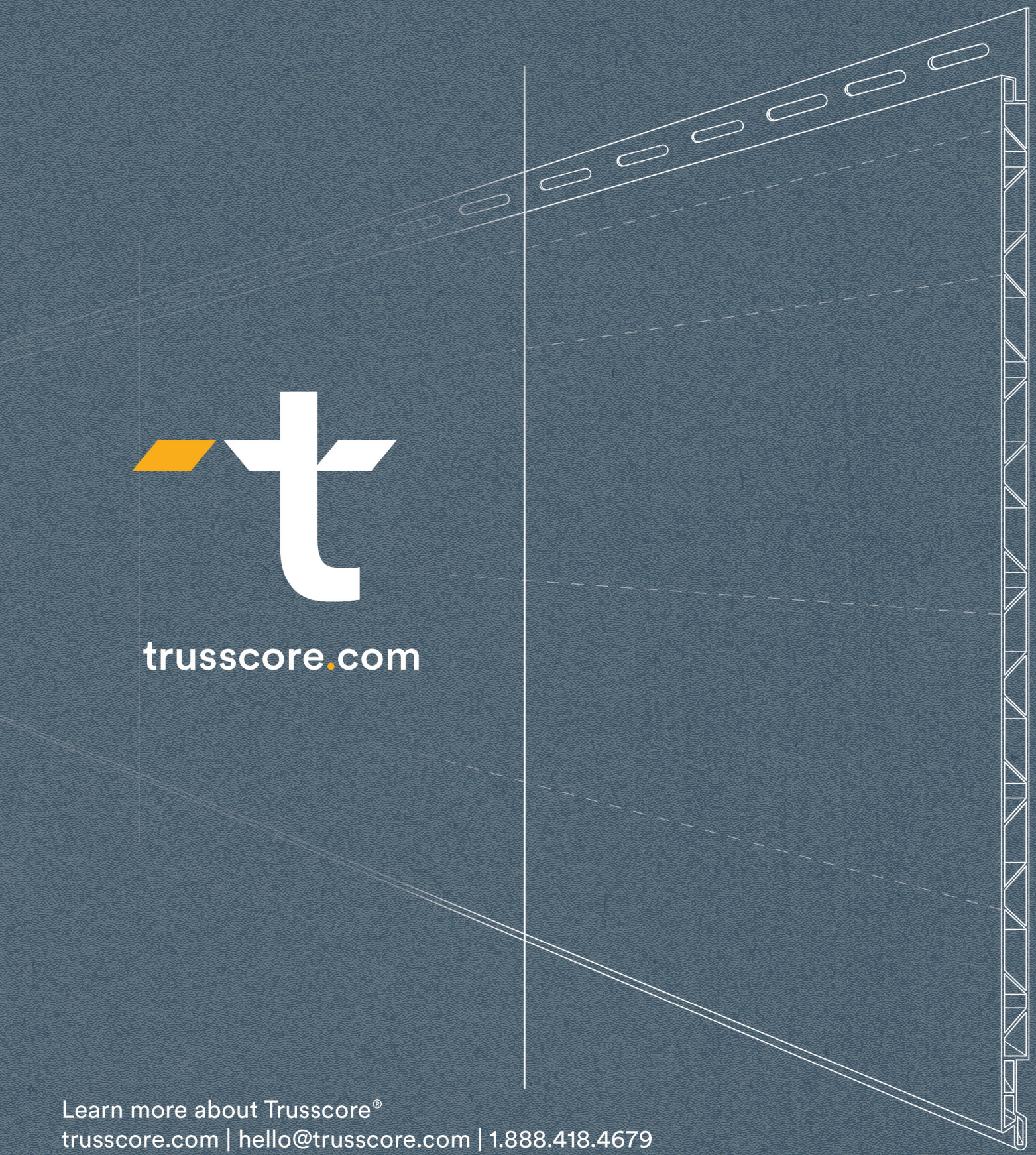

trusscore.com

Learn more about Trusscore®
trusscore.com | hello@trusscore.com | 1.888.418.4679

Copyright © 2025 Trusscore Inc. Trusscore, Trusscore Wall&CeilingBoard, and Trusscore SlatWall are trademarks of Trusscore Inc.
All other trademarks are the property of their respective owners. Specifications are subject to change. T-IG101S-001 03/2026