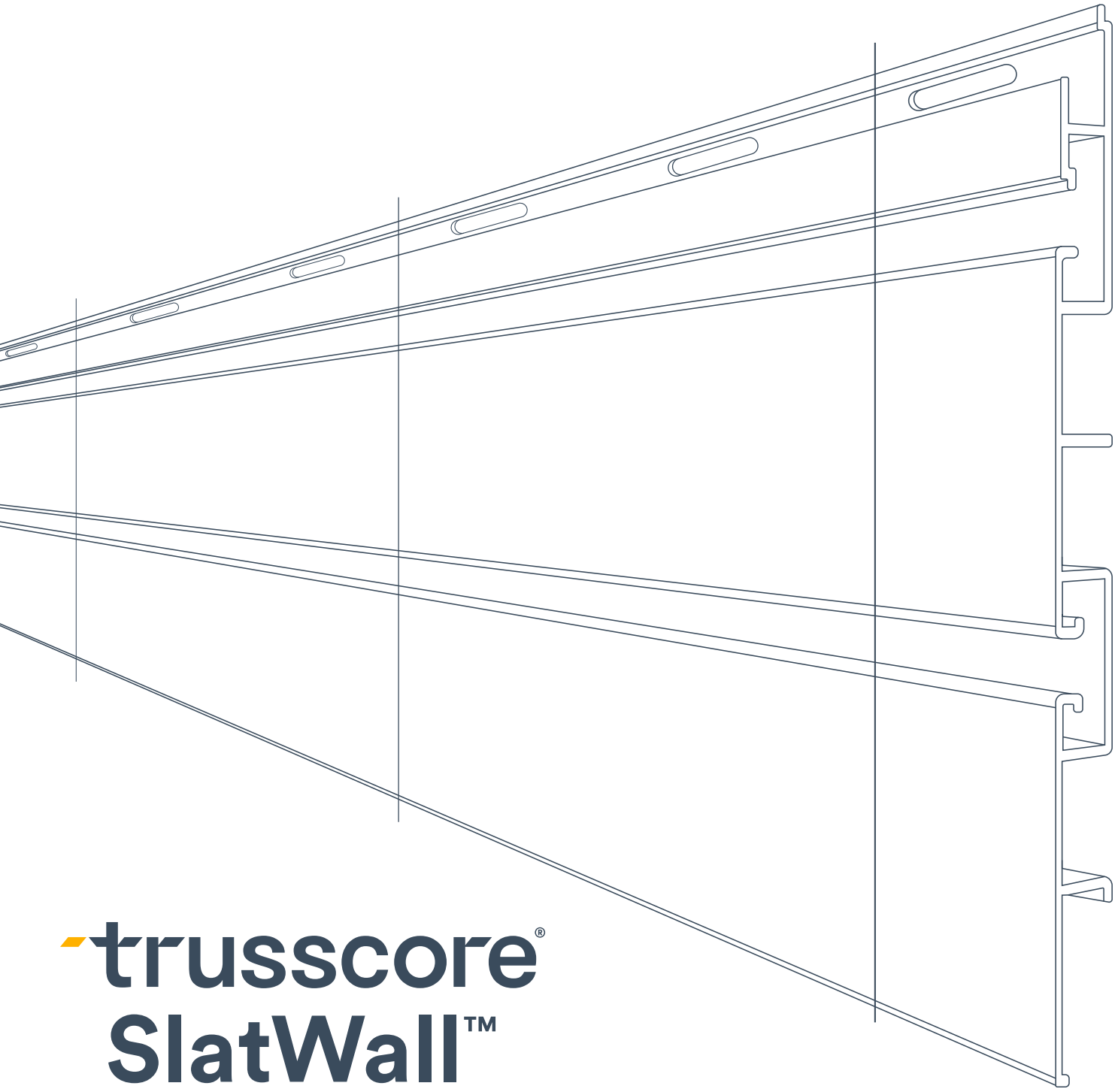

trusscore® SlatWall™ Installation Guide

For use with Trusscore Snap-In Trims

Trusscore® SlatWall™

Trusscore SlatWall is a heavy-duty wall storage solution designed to organize your home, office, or workspace.

Trusscore SlatWall is easy-to-install and allows anyone to quickly improve the look and function of any space. Trusscore SlatWall adds storage capacity and high functioning organization and serves as the perfect accompaniment to Trusscore Wall&CeilingBoard.

Contents

Warranty 2
Materials Required 3
Tools Required 4
General Recommendations 4
- Cutting 4
- Cutouts 4
- Fastening 5
  - Recommended Screws 5
  - Fastening Tips 6
- Panel Spacing 6
- Trim 6
- Use of Silicone Sealant 6
- Radiant Heat 6

Planning & Preparation 7
- Acclimatizing Your Product 7
- Planning Your Installation 7
- Surface Preparation 8

Installation Guidance 8
- Installing Trusscore SlatWall with Trusscore Wall&CeilingBoard 8
  - Bottom Connection 10
    - Transitioning Between Trusscore SlatWall and Trusscore Wall&CeilingBoard 10
    - Installing the Remaining Trusscore SlatWall Panels 11
  - Side Connection 12
    - Transitioning Between Trusscore SlatWall and Trusscore Wall&CeilingBoard 12
    - Installing SlatWall in the Corner of a Room 13
  - Top Connection 14
- Installing Trusscore SlatWall on Its Own 15

Cleaning 17
Specifications 18
Trim Dimensions 19
Disclaimers 19

Congratulations on your decision to use Trusscore SlatWall!

You have officially taken the first step towards the organized space you've always dreamed of. If this is your first time installing Trusscore products, or even if you have plenty of Trusscore installation experience, be sure to familiarize yourself with this guide. It's filled with tips, time-saving suggestions, and a few must-dos that will make your installation successful.

Let's get started.

For more information on product warranty please visit trusscore.com/warranty

Materials Required

Before starting any project, it's important to have the right materials on-site. In the table below, we've made it easy for you to double check that you have the material types you need for two of the most common Trusscore SlatWall installation configurations.

⚠ Material quantities associated with items in the table below are determined by the scope, size, and details of your project.

Material	 SlatWall + Wall&CeilingBoard Integrated Installation	 SlatWall Only Installation	Details
 Trusscore SlatWall Panels	✓	✓	
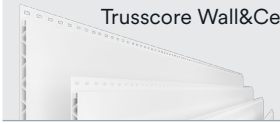 Trusscore Wall&CeilingBoard Panels	✓	✗	See Trusscore Wall&CeilingBoard Installation Guide for detailed instructions
 Universal Base	✓	✓	Paired with each snap-in trim for a two-piece system that makes installation fast, easy and versatile
 Snap-In H Trim	✓	Optional based on installation configuration	When installing with integrated horizontal Wall&CeilingBoard panels, a Snap-In H Trim is not required at the top of the SlatWall section
 Snap-In J Trim	✓	✓	
 Top Cap	✗	✓	
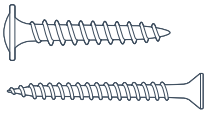 Screws	✓	✓	See Fastening section below for details

⚠ If your trim pieces look different from what is shown in the chart above, click here for alternative installation instructions.

What You Need

Tools Required

- Tape measure
- Stud finder
- Level
- Tin snips
- Drill or screw gun
- Power saw
- Ladder
- Safety glasses
- Face mask

General Recommendations

Cutting

As a simple method of eliminating cracking or chipping Trusscore SlatWall, use a saw blade designed to cut vinyl products. Alternatively, installing standard saw blades in the reverse direction is recommended. [Watch How] Coarse-toothed blades should be avoided for best results. As an additional option, concrete/masonry blades can be used. For all blades, apply smooth even pressure to the product when completing the cut. [Watch How]

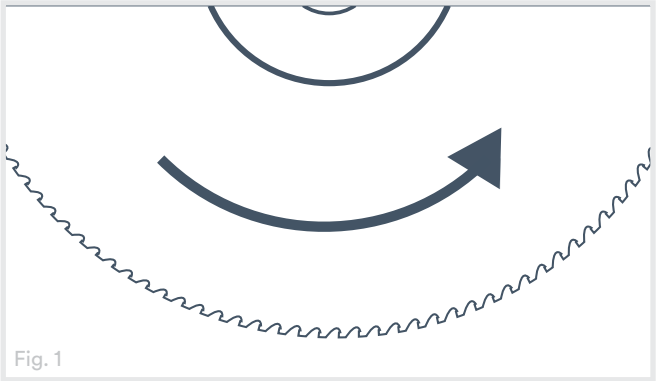

Fig. 1

CAUTION: Use of a blade installed in the reverse direction on materials other than Trusscore products may be unsafe.

Here are some examples of widely available blades we recommend.

Description	Product Number
IRWIN Marathon 7-1/4" - 120T Vinyl Siding Corded Circular Saw Blade	11830
Dewalt 12" - 80T Precision Trim Saw Blade	DW3232PT
AvantiPro 12" - 80T Fine Finish Saw Blade	P128080PP
Dewalt 6-1/2" - 90T Construction Saw Blade	DW9153
Makita 7-1/2" - 40T Carbide Tipped Saw Blade	A-90629
Makita 6-1/2" - 44T Carbide Tipped Fine Crosscutting Saw Blade	A-98360
Diablo 7-1/4" - 60T Carbide Tipped Ultra Finish Saw Blade	D0760

In cold weather, move the saw through the material slowly to prevent chipping or cracking. Performing a test cut will allow you to confirm the performance of your cutting tool without impacting your project.

Cutouts

If holes are required for objects like electrical boxes, lights, taps, etc., it is recommended to use a jigsaw, oscillating saw or hole saw to cut out the shape—Square cut-out: [Watch How] Round cut-out: [Watch How]. Here are some widely available options we recommend.

Here are some widely available options we recommend.

Description	Product Number
Bosch Basic for Metal-Thin Jig Saw Blade with 17-24 TPI	T118A
Diablo Bi-Metal General Purpose Jig Saw Blade with 5/10 TPI	DJT345XF
Dewalt HCS Clean Cut (Wood) Jig Saw Blade with 10 TPI	DW3760H
Milkwaukee 3" Diameter Hole Dozer Hole Saw Blade with Arbor	49-56-9670
Milkwaukee Universal Fit Oscillating Saw Blade	48-90-1231

Square cut-outs should be made following the steps below.

1. Measure the location of the opening on the wall
2. Mark the perimeter of your opening on the panel
3. Drill a 1/2" hole in the corner of the required opening

Insert the blade into the hole and proceed to cut out along your marked lines.

If performing this cut after the panel has been installed, ensure the space behind the area to be cut is free of obstructions, electrical wires, plumbing or any other object.

Cutting Trims

Tin snips are the safest and easiest tool to use when cutting Snap-In J Trim. It is recommended to measure and mark your cut lines on the fully assembled trim and Universal Base first, then disassemble and cut each piece separately using tin snips.

A hand held circular saw or miter saw is recommended to cut Snap-In H Trim. With a saw, it is not necessary to disassemble the trim from the Universal Base before cutting.

Fastening

Trusscore SlatWall is designed to be installed with screws. Use corrosion resistant #8/#10 gauge screws with a flat-bottomed, low profile head (i.e. truss head, pancake head, round or washer head, cabinet, and other low profile screws) and a minimum head diameter of 3/8".

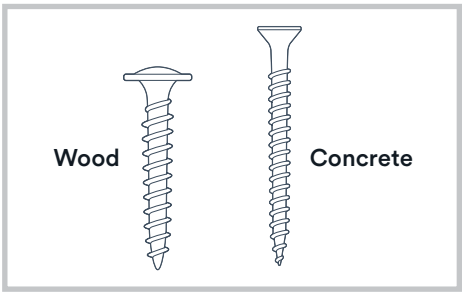

Wall Assembly	Screw Recommendation	Screw Length
Wood Stud	#8/#10 Truss Head, Pancake Head, Round or Washer Head, Cabinet and Other Low Profile Screws	1-1/4"
Drywall		1-3/4" to 2"
Furring Strips/Strapping		2-1/2"
Plaster		2" to 2-1/2"
Concrete	3/16" Flathead Tapcon	1-1/4"
Metal or Steel Studs	Self-Tapping #8/#10 Low Profile (as above)	1-1/4"

⚠ For highly corrosive or moist environments, we recommend the use of stainless-steel screws

⚠ Failure to follow fastening instructions may damage the panel and/or void the warranty

Fastening Tips

- **Do not over-tighten screws. If screws are installed too tightly, consecutive SlatWall panels may become difficult to interlock**
- Trusscore SlatWall panels should only be installed horizontally
- Before fastening a panel, ensure that the panel has achieved a proper interlocking connection with the previously installed board along its entire length
- Allow a minimum of 1/16" (about the thickness of a dime) between the back of the screw head and the screw flange (Fig. 2)
- Always fasten in the center of the screw flange slots. Fastening at the end of the slots can cause the panels to buckle or distort (Fig. 3)
- Screws must be installed straight and level to allow for movement (Fig. 4)
- All panels must be allowed to slide freely after fastening to allow for expansion and contraction
- Screws should penetrate a minimum of 1" into solid backing
- SlatWall must be fastened every 16" on center to support the full 75 lbs. of load per square foot

Fig. 2

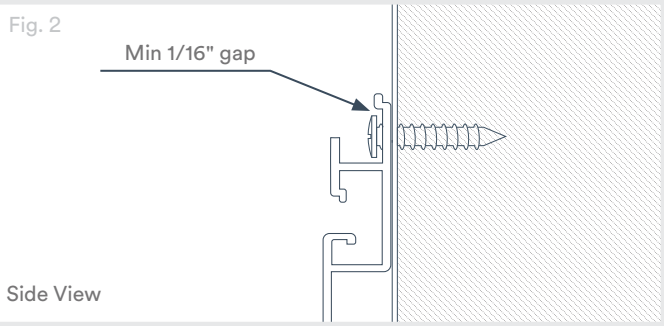

Fig. 3

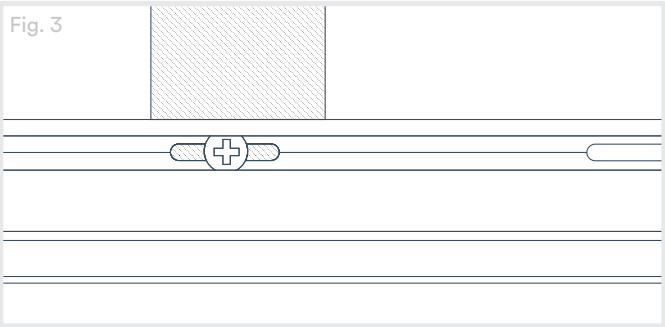

Fig. 4

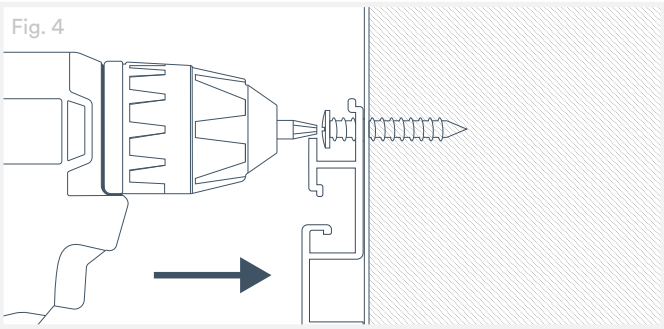

Panel Spacing

A minimum of 1/4" clearance must be maintained between both ends of each panel and any adjacent trims or panels to allow for expansion and contraction of the product.

Trim

- Screws should be used to secure the Universal Base for snap-in trims every 24" or with each stud where possible
- If an area requires more than 10' of continuous trim, the trims should be cut square and butted tightly together with silicone sealant applied where the two ends meet
- To create a water-tight corner at door and window openings, insert a small bead of silicone caulking on the channel opening of trim pieces before installing panels

Use of Silicone Sealant

We recommend that a silicone sealant is used to seal all corners, around all fixtures, and to repair small holes. The best way to select a corresponding colored silicone is to compare a sample of Trusscore to the color shown physically on the silicone tube at the store, as colors and brands will vary regionally.

Radiant Heat

All sources of radiant heat must be shielded and located with a minimum of 24" clearance between a heating unit and Trusscore SlatWall. Consult the manufacturer of any heater for further guidelines regarding any necessary shielding and clearances prior to installing the unit.

Planning & Preparation

Acclimatizing Your Product

Prior to installation, Trusscore SlatWall must be placed in the environment where it will be installed for a minimum of 24 hours. This will minimize the amount of expansion and/or contraction that may occur after the product is installed and will ensure the best possible installation quality.

Be sure to loosen or remove any packaging material that may restrain the product while it is acclimatizing [Watch How].

Planning Your Installation

When planning your Trusscore SlatWall Installation, it is important to note the following key considerations.

- Trusscore SlatWall requires a sound structure (e.g. wood studs or masonry walls) to support the weight of the panels and anything you choose to hang from them. Ensure the structure on which Trusscore SlatWall will be installed is both strong and stable to in order support the system for the duration of its use
- In general, one must account for the fact that SlatWall panels overlap each other when in an installed position. The total height of a SlatWall panel is 7-1/8", and the exposed face of each panel after installation is 5-7/8"
- When transitioning from Trusscore Wall&CeilingBoard to Trusscore SlatWall, the bottommost SlatWall panel will overlap the Wall&CeilingBoard panel by approximately 1-1/4". Taking this overlap into account is key to accurately planning for the height of your SlatWall installation. The overlap applies to both horizontal (Fig. 5) and vertical (Fig. 6) Wall&CeilingBoard installation orientations

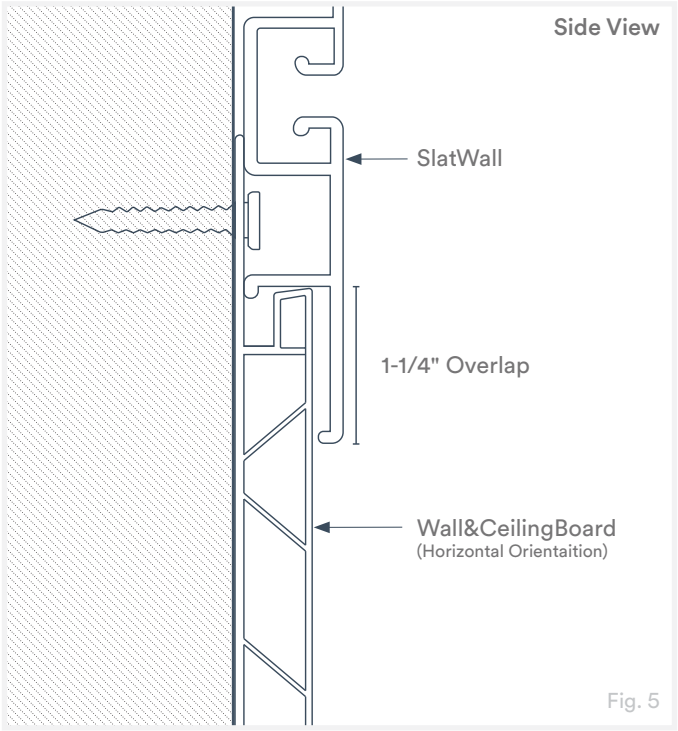

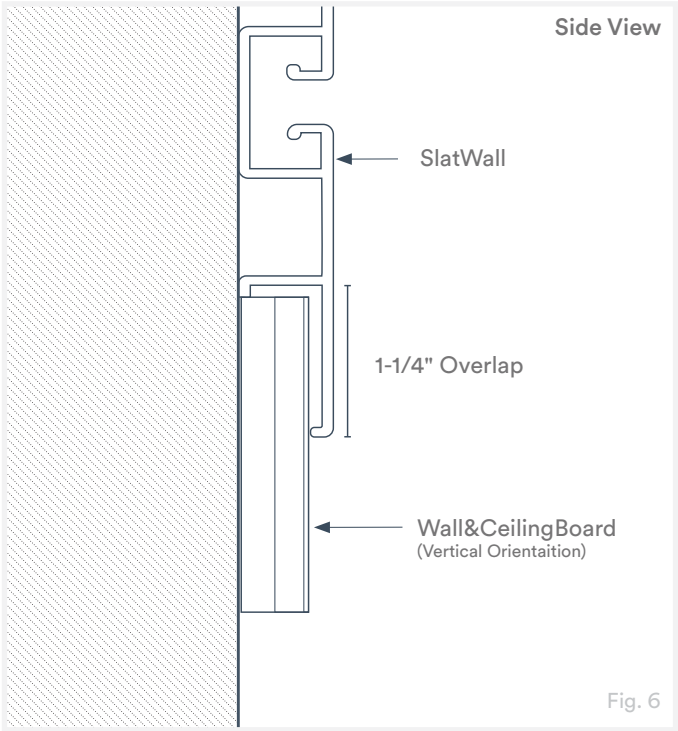

When using a Top Cap trim to complete the top of your SlatWall installation area, ensure there is a minimum clearance of 1/2" between the top of your final SlatWall panel and any adjacent surface, such as a ceiling.

Surface Preparation

- Check surfaces for straightness and install furring strips or strapping where necessary
- Ensure all insulation and vapor barriers are installed according to your local building code prior to installing Trusscore SlatWall
- For added support/coverage around all door and window openings to properly support trims, install wood blocking (short pieces of lumber) between studs where necessary
- SlatWall panels must start fastened to a stud, and finish fastened to a stud. Studs should be no more than 16" on-center apart to support the full load rating of Trusscore SlatWall (75 lbs. of load per square foot). If SlatWall will be installed over drywall or another material affixed to the studs, you must locate and mark each stud using a stud finder prior to beginning installation
- Prior to the installation of Trusscore SlatWall, it is recommended that the building is fully enclosed, heating and/or cooling equipment is in operation, and residual moisture from construction has been removed from the work space

Installation Guidance

Installing Trusscore SlatWall with Trusscore Wall&CeilingBoard

Trusscore SlatWall integrates seamlessly with Trusscore Wall&CeilingBoard. This section will walk you through the installation process of integrating the two products in your project.

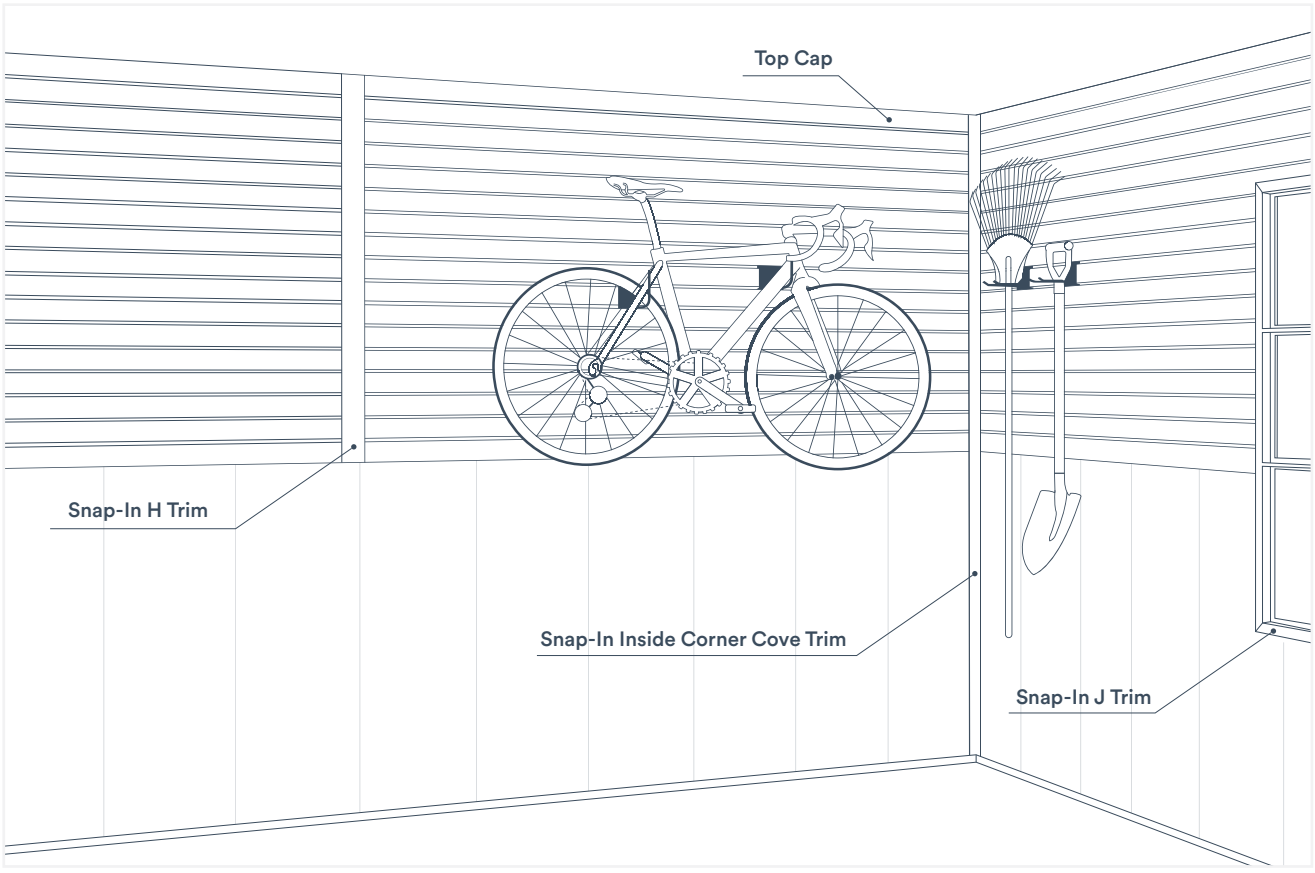

Planning and preparing your desired installation space are necessary first steps. Please refer to the Planning & Preparation section of this installation guide.

Establish the placement and layout of the Trusscore SlatWall installation area.

1. Refer to the image below for the recommended installation layout (Fig. 7) and appropriate spacing measurements (Fig. 8). SlatWall panels should start and finish on stud locations. Identify stud locations and leave adequate space between Wall&CeilingBoard, SlatWall panels, and the Universal Base for the Snap-In H Trim, which transitions between the two. Suggested spacing is the same for both horizontal and vertical Trusscore Wall&CeilingBoard installation orientations.

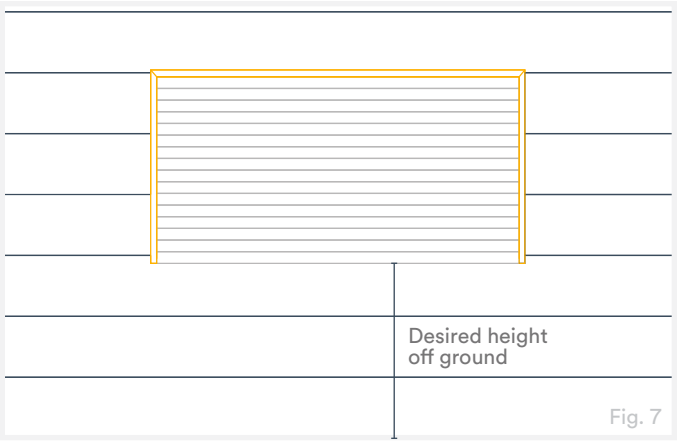

Fig. 7

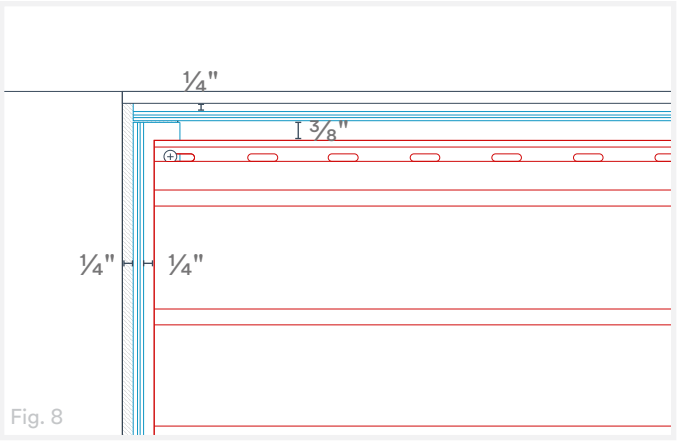

Fig. 8

Trusscore Wall&CeilingBoard Trusscore SlatWall Snap-In H Trim Universal Base

2. Inside the SlatWall installation area, locate and mark each wall stud using a stud finder (Fig. 9). Use a level and a pencil to mark each stud from the top to the bottom of your installation area, ensuring each line is plumb (Fig. 10).

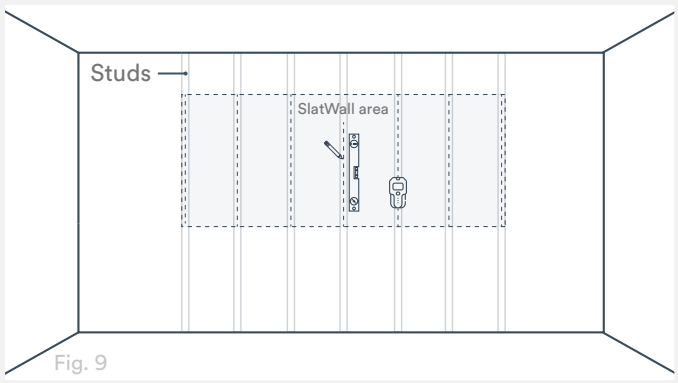

Fig. 9

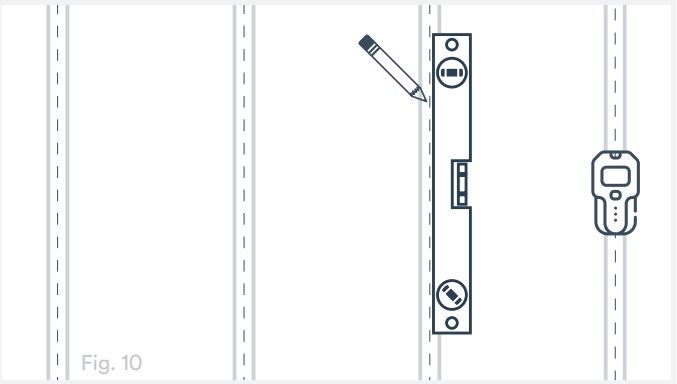
Fig. 10

⚠ Each SlatWall panel must be fastened to studs every 16" on-center minimum in order to support up to 75 lbs per square foot. If stud intervals are greater than 16", the installation of blocking between studs may be required to provide sufficient support to the SlatWall panels, trim and any adjacent Trusscore Wall&CeilingBoard panels if applicable.

3. Within the SlatWall installation area, determine where the SlatWall panel ends will be and install a Universal Base at each of those stud locations. Ensure the screw flange is flush with the edge of the stud, so the teeth channel is centered within the stud. Please see the Side Connection section for details (Fig. 11).

   Install a Universal Base along the top of the entire length of the SlatWall installation area. Please see the Top Connection section for details (Fig. 11).

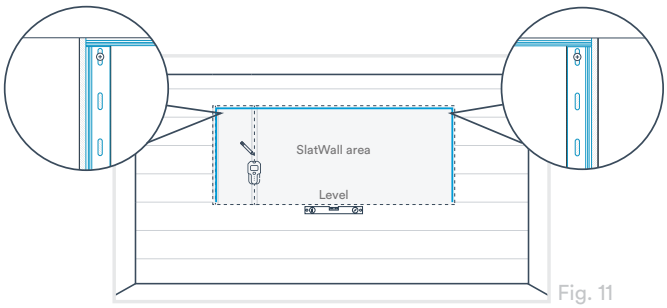

Fig. 11

4. Install your Trusscore Wall&CeilingBoard panels, leaving an opening for your SlatWall installation as determined by the spacing guidance provided in Step 1 (Fig. 8).

For detailed installation instructions and more information about Trusscore Wall&CeilingBoard installation, please see our Trusscore Wall&CeilingBoard Installation Guide.

Bottom Connection

Transitioning Between Trusscore SlatWall and Trusscore Wall&CeilingBoard

1. Trusscore SlatWall is designed to easily install directly above vertically and horizontally oriented Trusscore Wall&CeilingBoard panels. [Watch How]

   When installing the SlatWall panels in a vertical Wall&CeilingBoard install, rest the bottom lip on the back of the SlatWall panel directly on top of the Wall&CeilingBoard panel below it (Fig. 12 & 13). Once in place, use a level to ensure it is horizontally level before fastening.

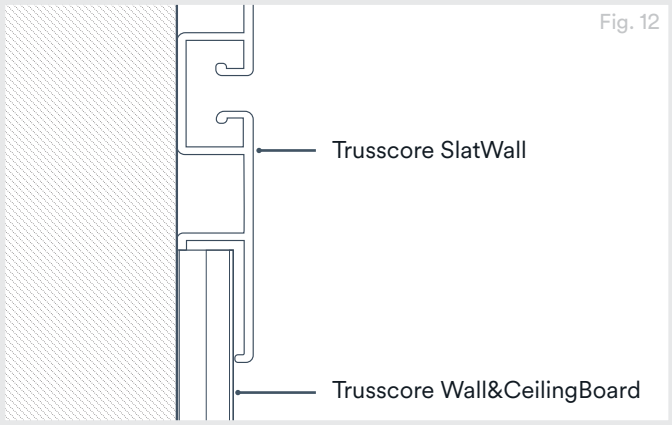

Fig. 12

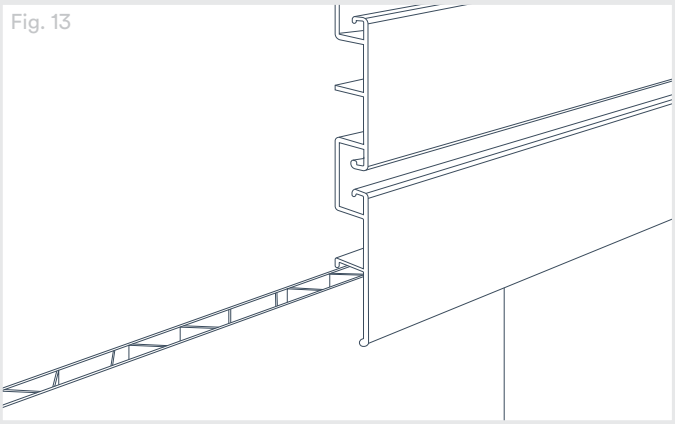
Fig. 13

When installing the SlatWall panels in a horizontal Wall&CeilingBoard install, there are two possible installation configurations depending on the intended height of the bottom SlatWall panel from the ground.

a. The distance from the floor to the bottom of the first SlatWall panel is an even increment of 16" (the width of the exposed face of Wall&CeilingBoard panels). The resulting connection between SlatWall and Wall&CeilingBoard is shown below (Fig. 14).

b. If the desired distance from the floor to the bottom of the first SlatWall panel is not an even multiple of 16", the Wall&CeilingBoard panel closest to the floor should be ripped to an appropriate width to achieve the desired SlatWall height (Fig. 15). The resulting connection between SlatWall and Wall&CeilingBoard is shown below.



Fig. 14

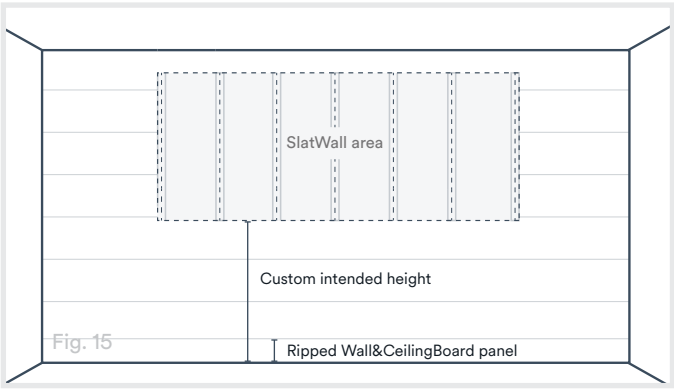

Fig. 15

Please reference the Trusscore Wall&CeilingBoard Installation Guide for further instruction on ripping Wall&CeilingBoard panels.

2. Prior to installing the first (bottom) panel of SlatWall, use a level to ensure it is horizontally level before fastening.
3. If your installation is in a space with strong air movement, place a bead of silicone inside the bottom lip of the SlatWall panel where it meets the Wall&CeilingBoard panel(s) (Fig. 16). This ensures the panel will remain fixed in place. This is step is optional.
4. Fasten the SlatWall panel to the wall through the screw flange and into each available stud.

⚠ Do not overtighten the screws as this will disrupt the installation of subsequent panels.

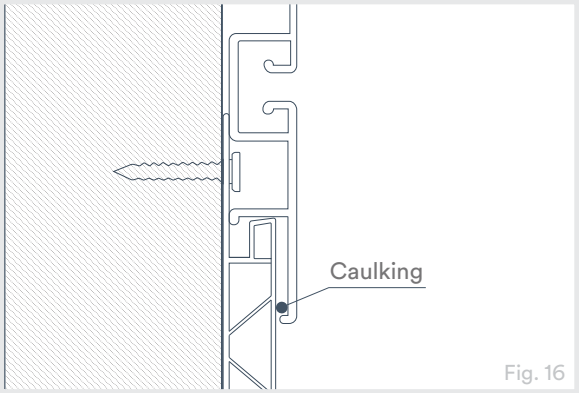

Fig. 16

Installing the Remaining Trusscore SlatWall Panels

Starting from the bottom, proceed with installing the remaining SlatWall panels.

1. Place a panel on top of the previously installed panel, aligning the ends of both panels (Fig. 17).
2. Starting at one end and moving to the other, apply gentle downward pressure (towards the floor) to interlock the panel with the previously installed panel below. You will feel and hear a "snap" when the panels have properly interlocked together (Fig. 18).
3. Fasten the panel you just placed into position by drilling a screw through the slotted screw flanges into each of the studs you marked in an earlier step.
4. Repeat steps 1-3 above step for all remaining panels.

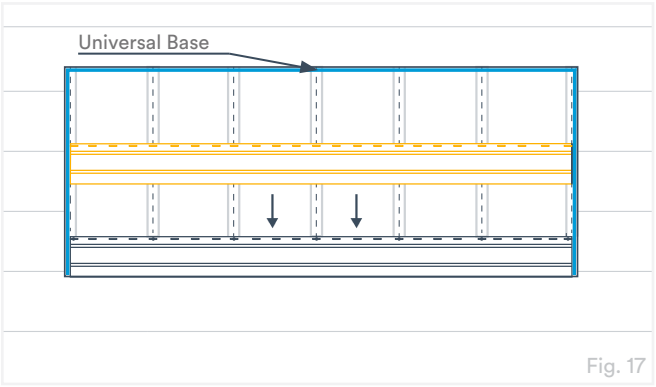

Fig. 17

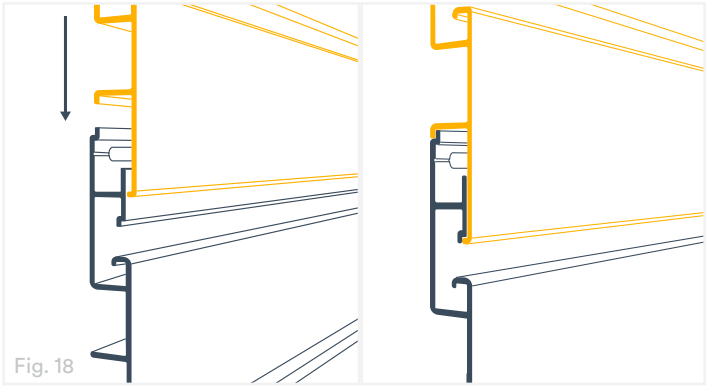
Fig. 18

Side Connection

Transitioning Between Trusscore SlatWall and Trusscore Wall&CeilingBoard

A **Snap-In H Trim** accomodates the transition between the ends of the SlatWall panels and any adjacent Trusscore Wall&CeilingBoard panels.

There are two components to a Snap-In H Trim:

- Snap-In H Trim
- Universal Base

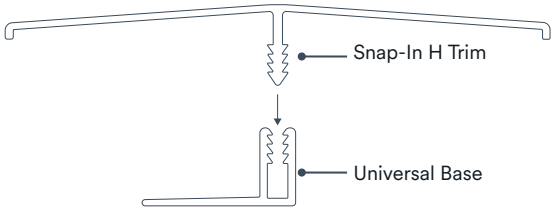

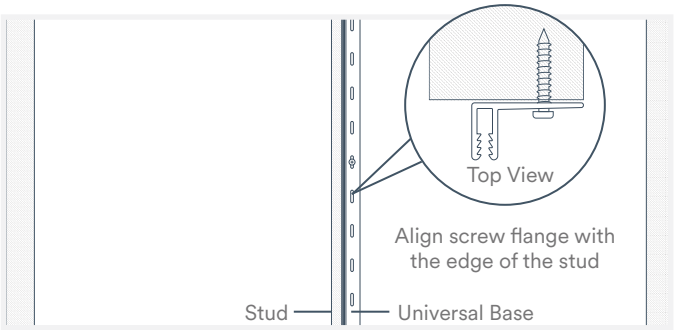

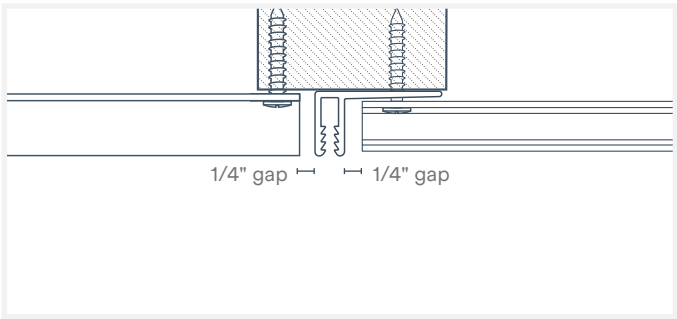

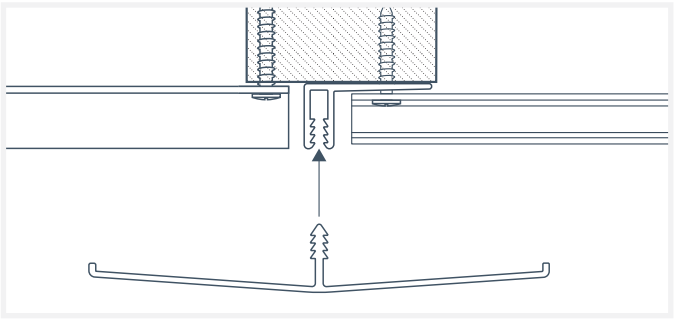

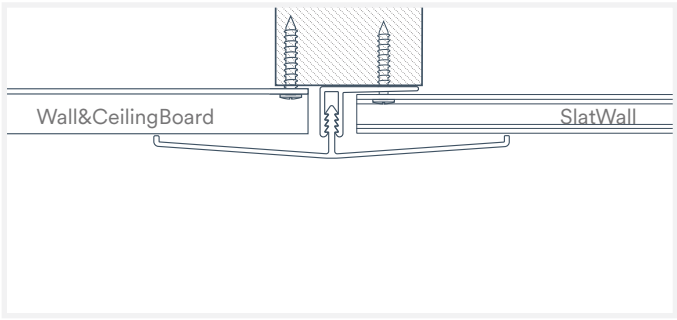

1. Place the Snap-In H Trim up to your installation area and make a mark where it meets the bottom edge of the bottommost SlatWall panel. Cut the Snap-In H Trim square at this mark.
2. On the side with the teeth, measure and mark 1-1/4" inwards from the bottom edge (end) of the Snap-In H Trim. At the mark, make a vertical snip in both grooved standoffs using tin snips or an oscillating multi-tool (Fig. 19).
3. Using the tip of the tin snips or the oscillating multi-tool, remove the remaining teeth material between your vertical snip and the bottom edge (end) of the trim (Fig. 20). The remaining material should be small enough to allow the Snap-In H Trim to sit flush overtop of the Trusscore Wall&CeilingBoard panel below it, without obstruction.

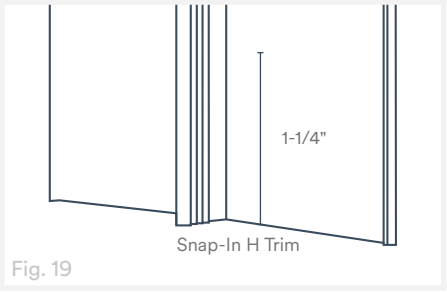

Fig. 19

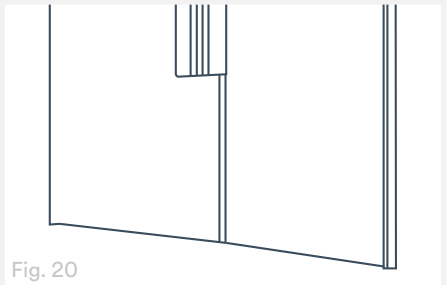
Fig. 20

Installing SlatWall in the Corner of a Room

Snap-In J Trim

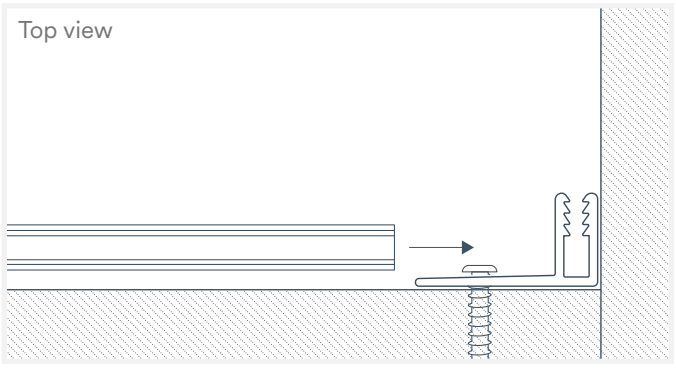

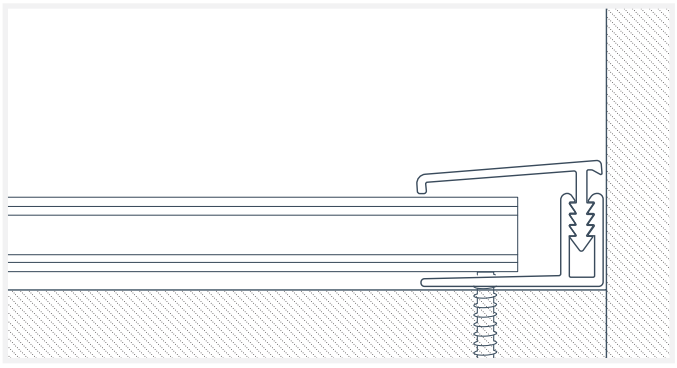

Snap-In Inside Corner Cove Trim



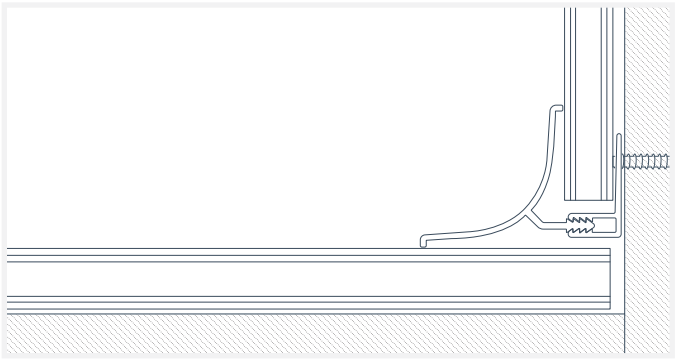

Top Connection

A **Snap-In H Trim** accommodates the transition between the top of SlatWall panels and any adjacent Trusscore Wall&CeilingBoard panels.

There are two components to a Snap-In H Trim:

- Snap-In H Trim
- Universal Base

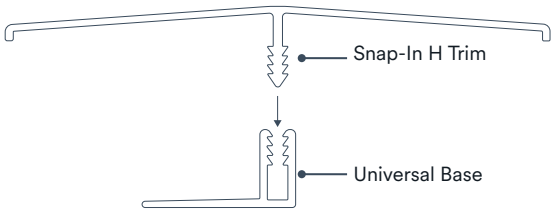

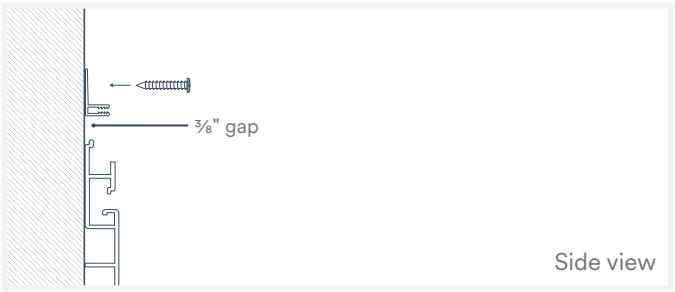



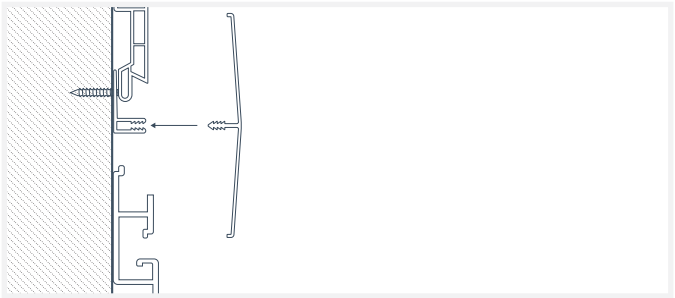

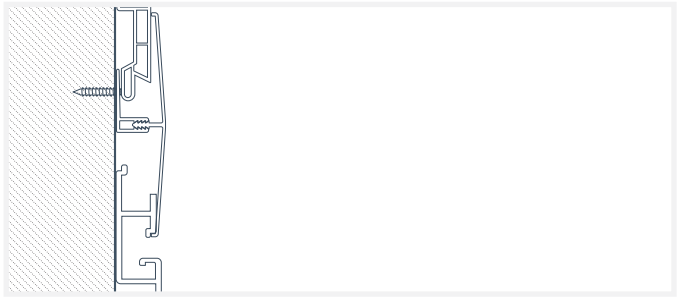

1. Position the Universal Base 3/8" above the top of the SlatWall panel to ensure that when the Snap-In H Trim is inserted in place, the lip at the outer edge of the Snap-In H Trim aligns with the top row groove of the SlatWall panel (Fig. 21). Leave a gap of approximately 1/4" between the teeth channel of the Universal Base and the Wall&CeilingBoard installed above the SlatWall area.
2. Alternatively, for horizontal Wall&CeilingBoard installs only, the tongue of the first Wall&CeilingBoard panel at the top can be inserted directly into the channel of the uppermost SlatWall panel without using Snap-In H Trim (Fig. 22).

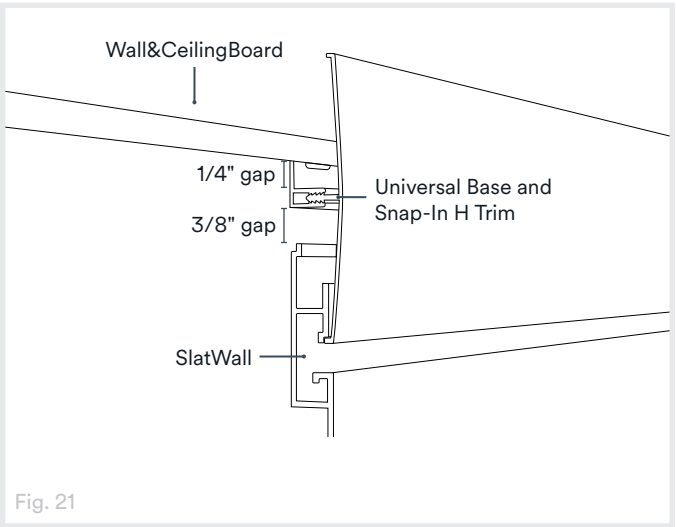

Fig. 21

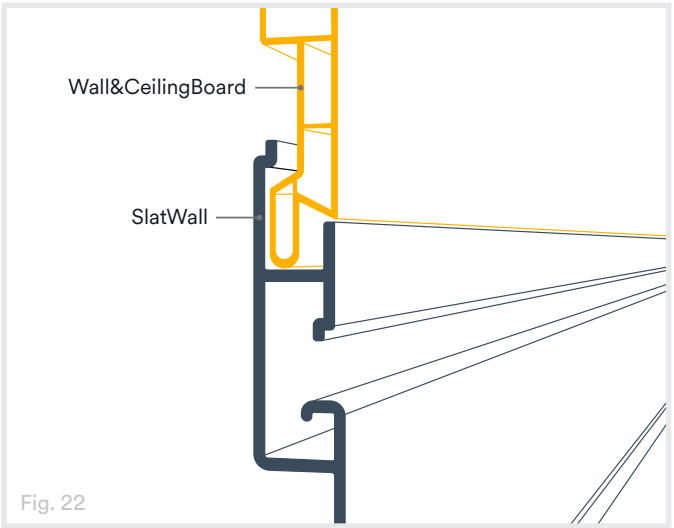

Fig. 22

Installing Trusscore SlatWall on Its Own

When installing Trusscore SlatWall without the integration of Trusscore Wall&CeilingBoard, we recommend the SlatWall installation area be framed with Snap-In J Trim on the bottom and each side, and a Top Cap trim will be used to complete the top of the installation. This section will explore that process.

Planning and preparation of your desired installation space is a necessary first step. Please refer to the Planning & Preparation section of this installation guide, above.

1. Locate and mark the area in which the SlatWall panels will be installed. Use a stud finder to find the first stud which will serve as the edge of your installation area (Fig. 23).
2. Measure from the floor up to the height you wish to start your installation and mark it with a pencil on the studs or surface material (i.e., drywall).
3. Use a level to extend a line across the intended width of your installation (Fig. 24).

⚠ Trusscore SlatWall panels should start fastened to a stud, and finish fastened to a stud. Studs should be no more than 16" apart on-center to support the full load rating of Trusscore SlatWall (75 lbs. of load per square foot).

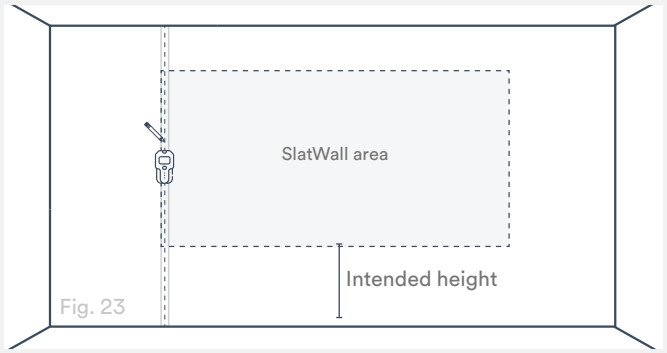

Fig. 23

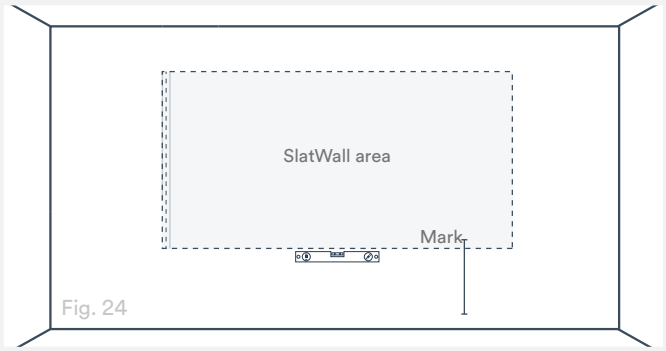

Fig. 24

4. Using a stud finder and a pencil, locate and mark all other wall studs within the installation area (Fig. 25).
5. Use a level to mark the stud from the top to the bottom of the installation area (Fig. 26).

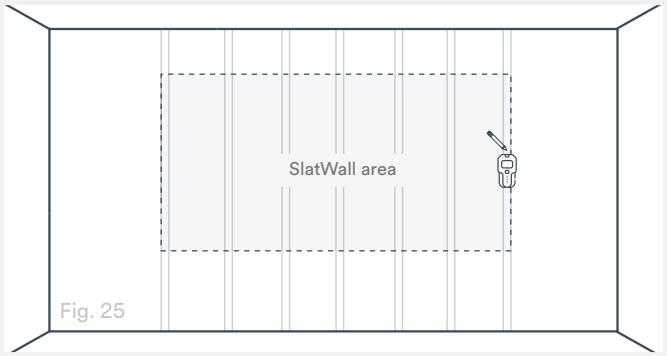

Fig. 25

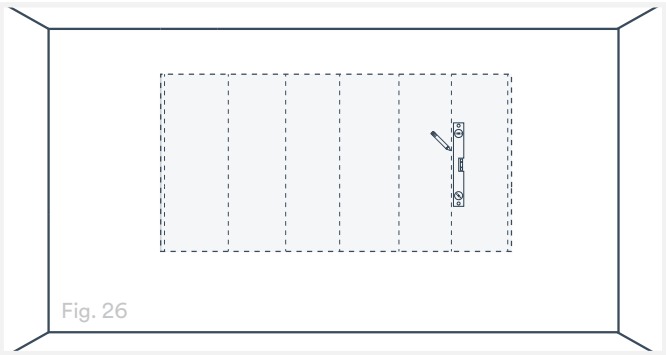
Fig. 26

6. Install the vertical Snap-In J Trim to the wall. Align the Universal Base with the first and last vertical stud lines you marked with the screw flange pointing into the SlatWall area (Fig. 27). Fasten the Universal Base at the top and bottom ends only (Fig. 28).

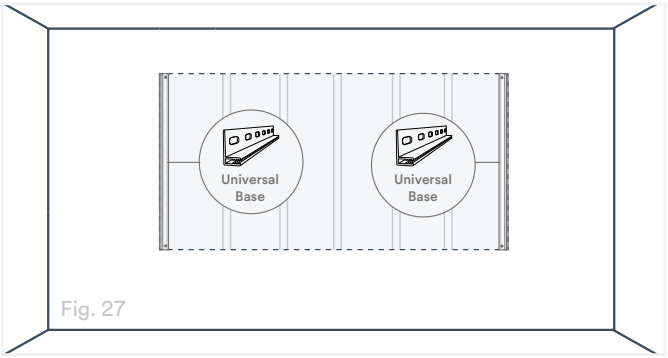

Fig. 27

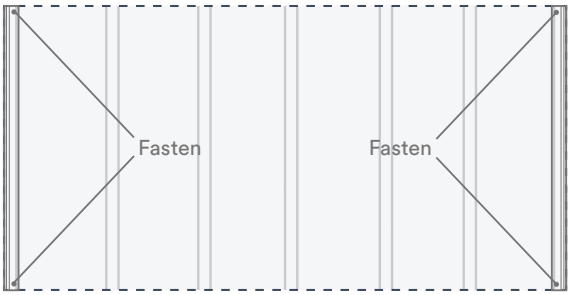

Fig. 28

7. Measure and cut a Universal Base to fit along the bottom and between the two vertical Universal Bases. Align the Universal Base with the horizontal height line you marked in Step 3 and ensure the screw flange is pointing into the SlatWall area. Fasten at each stud location (Fig. 29).
8. Position the first SlatWall panel so each end is 1/4" from the teeth channel of the Universal Base on each side. Align the bottom of the SlatWall panel flush along the teeth channel of the Universal Base at the bottom.

   Use a level to ensure the SlatWall panel is level before fastening at each stud location. (Fig. 30).

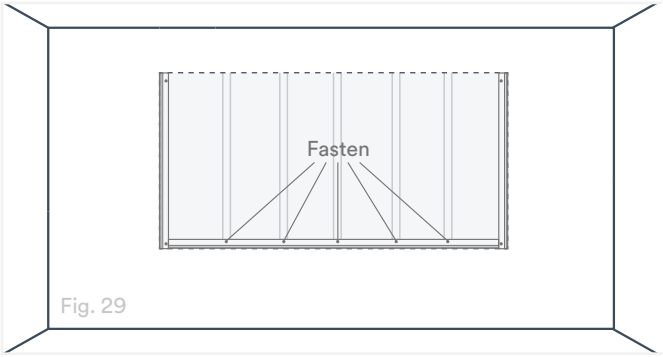

Fig. 29

Starting from the bottom, proceed with installing the remaining SlatWall panels.

9. Place the next panel on top of the previous one, ensuring both ends of the panel are aligned (Fig. 31).
10. Next, apply gentle downward pressure (towards the floor) to interlock the panel with the previously installed panel below. You will feel and hear a "snap" when the panels have properly interlocked together (Fig. 32).

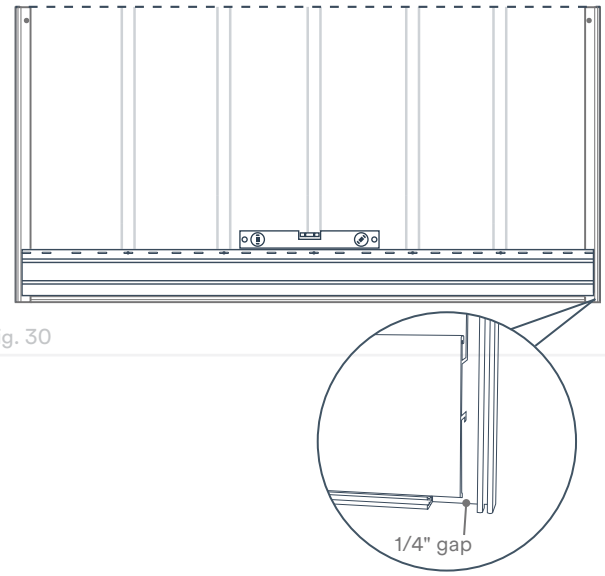

Fig. 30

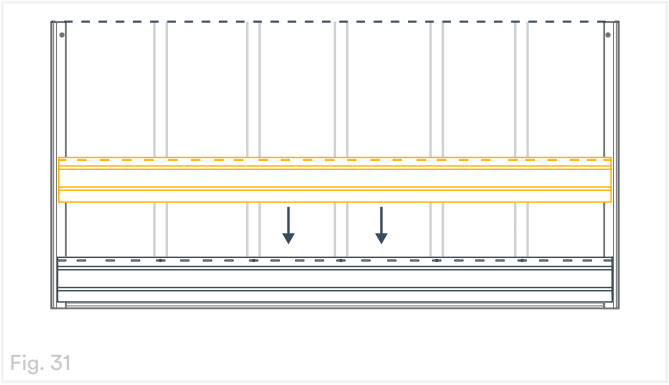

Fig. 31

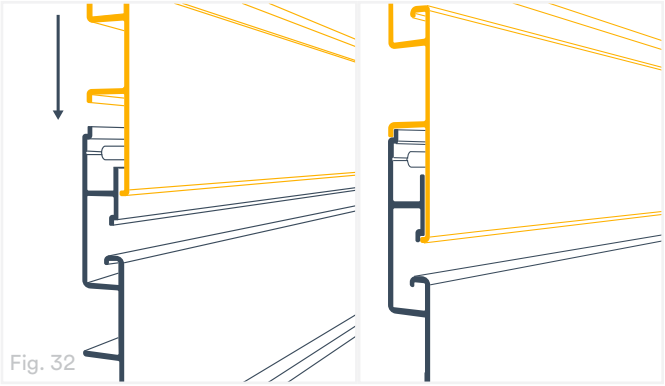

Fig. 32

11. Fasten the panel through the slotted screw flanges into each of the studs you marked in an earlier step, including the ends of each SlatWall panel where it overlaps with the Universal Base.
12. Repeat Steps 9 to 11 for the remaining panels.
13. Measure and cut the Top Cap to match the entire length of the uppermost SlatWall panel.
14. Snap the bottom lip of the Top Cap into the SlatWall panel as shown (Fig. 33).
15. Align the teeth of the Snap-In J Trim with the Universal Base and press together until tight to the SlatWall panels and Top Cap (Fig. 34).

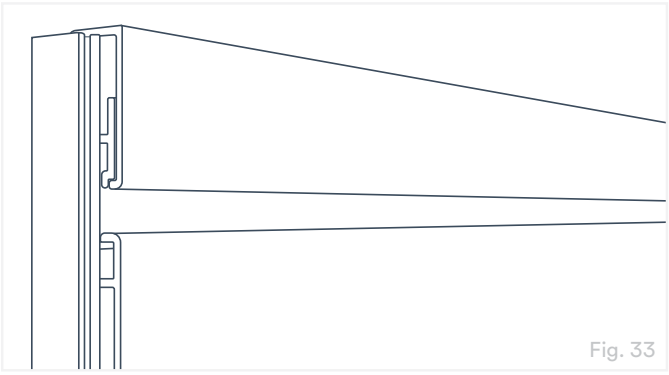

Fig. 33

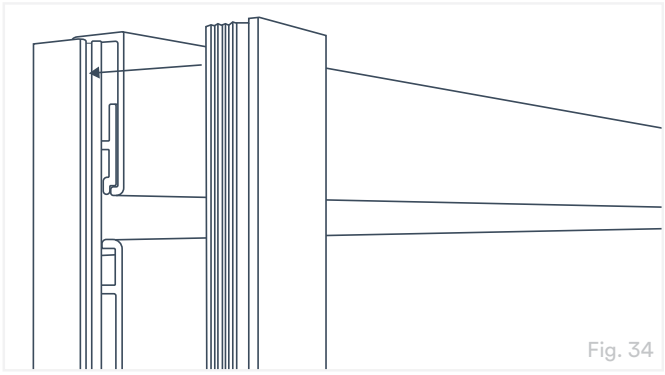

Fig. 34

Cleaning

Here are some guidelines to help you handle any level of dirt your product encounters:

To remove common dirt and maintain your Trusscore product's beautiful appearance, wash using a sponge or soft cloth and a mild cleaning solution. View the Care & Maintenance Guidelines.

⚠ Abrasive cleaning pads/cloths should not be used as they could scratch or alter the surface of the product.

If the dirt is difficult to remove, wipe clean with a solution of:

- 1/3 cup laundry detergent (e.g. Tide®)
- 2/3 cup tri-sodium phosphate (e.g. TSP®)
- 3.79 L (1 gallon) of water

Swifter® Dusters™ are very helpful in removing dust from Trusscore Wall&CeilingBoard.
Mr. Clean® Magic™ Erasers can be used to remove marks on Trusscore Wall&CeilingBoard.

Specifications

Trusscore SlatWall

Trusscore SlatWall is available in 8' lengths and is available in white and gray (Pantone 427 CP).
If installed on studs spaced 16" on-center, Trusscore SlatWall supports up to 75 lbs. per square foot of load.

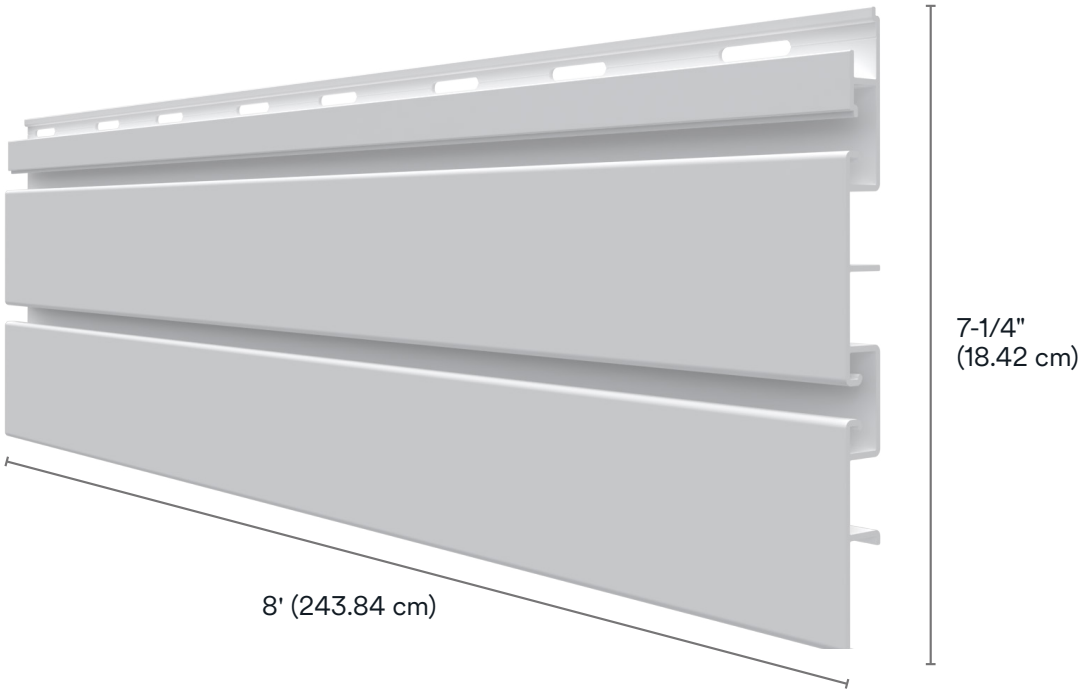



Trim Dimensions - Snap-In Trims

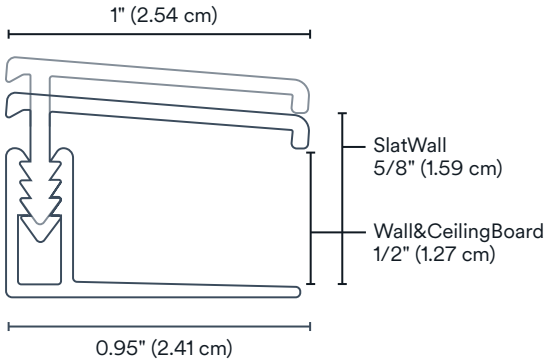

Snap-In J Trim

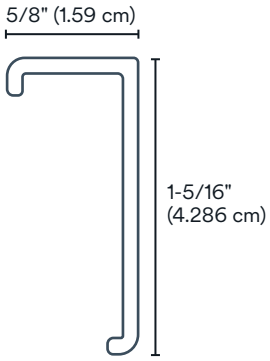

Top Cap

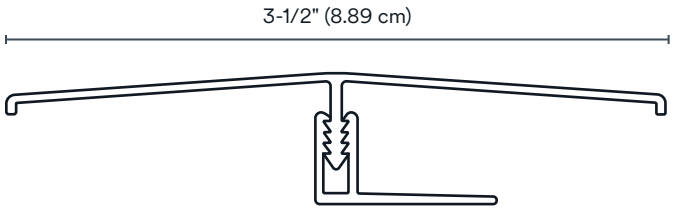

Snap-In H Trim

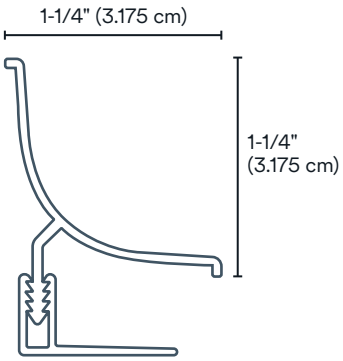

Snap-In Inside Corner Cove Trim

Disclaimers

The manufacturer is not responsible for problems related to expansion due to temperature fluctuations. If wide temperature fluctuations exist in the area of the Trusscore installation, allow for expansion and contraction gaps in moldings and perimeter. Before installation, Trusscore SlatWall panels and trims as well as any additional Trusscore products involved in the installation should be properly acclimatized to minimize expansion and contraction issues.

As part of our focus on continuous innovation, Trusscore leverages advancements in material science to improve the performance and environmental impact of our products. Through the use of zero wastewater production processes, incorporation of recycled material in our products, and commitment to using raw materials with low environmental impact we are developing more sustainable building products.

Our drive to continually develop better looking, better performing, and more sustainable products can result in minor changes to the color and texture of our products when compared to previously manufactured products. Therefore, install products of the same package and/or pallet when completing your project to ensure the best possible results to minimize any minor variations.

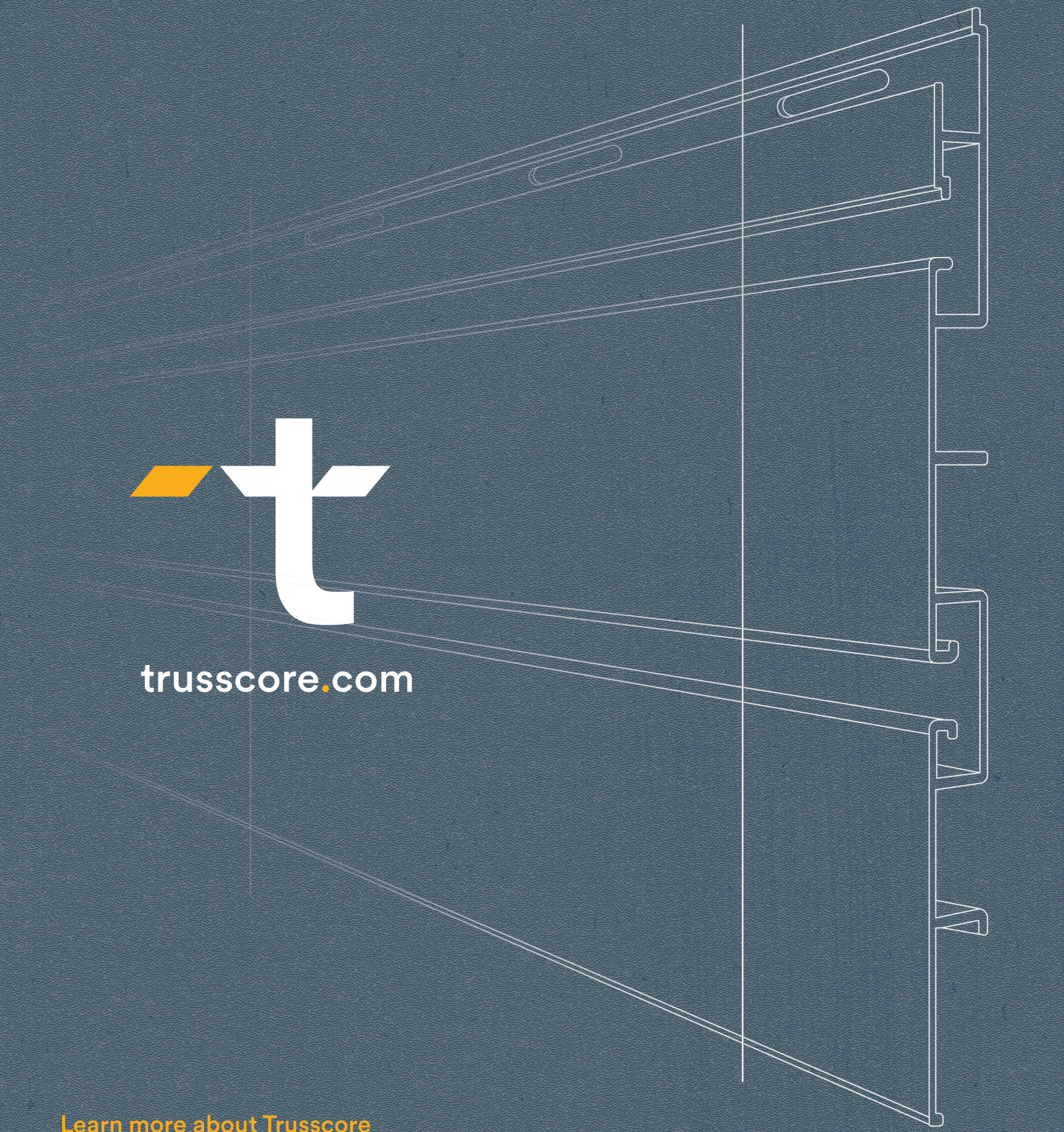

trusscore.com

Learn more about Trusscore

trusscore.com | hello@trusscore.com | 1.888.418.4679

Copyright © 2023 Trusscore Inc. Trusscore is a trademark of Trusscore Inc. All other trademarks are the property of their respective owners.
Specifications are subject to change. T-IG102S-001 12/2025